Duke/Reign Bed

Ottoman Bed Page 3 -> 12

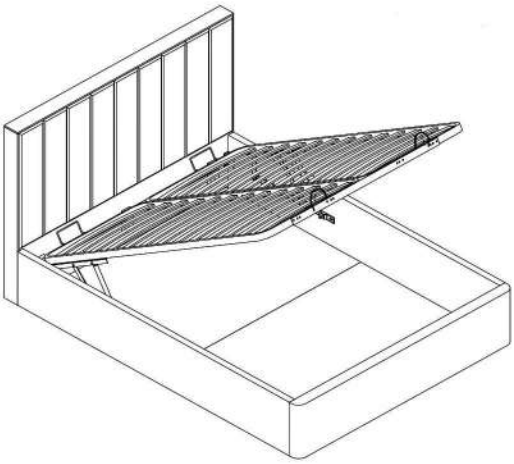

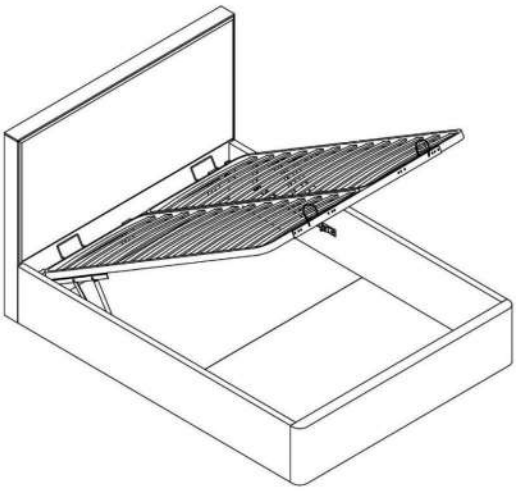

Sprung slats Page 13 -> 15

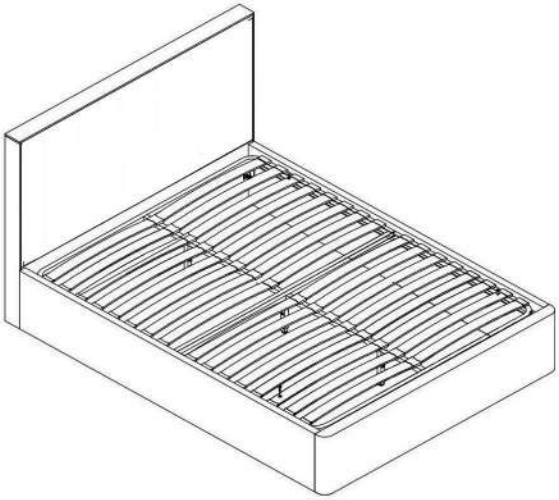

Sleepmotion Page 16 -> 21

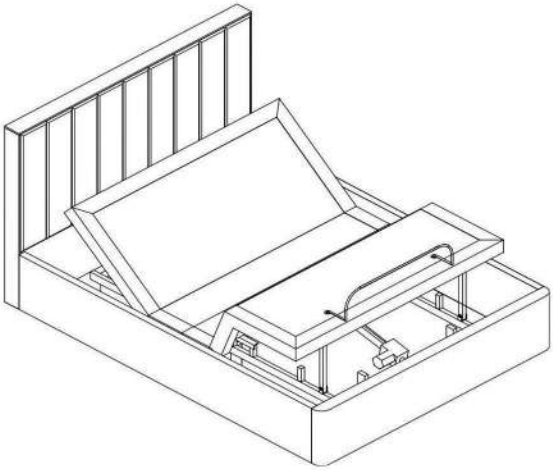

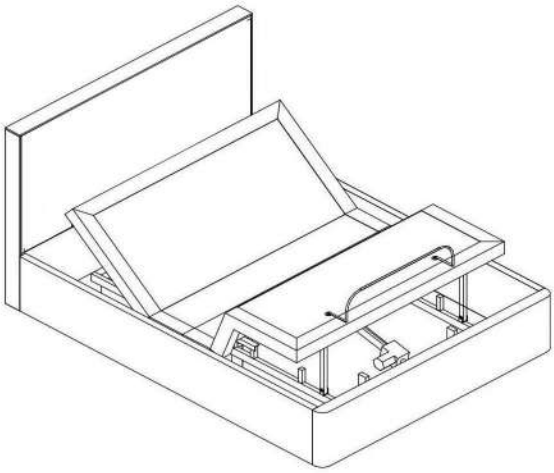

1 hour approx assembly time

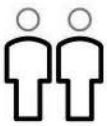

Two person assembly

TEMPUR®

Dreams

Thank you

Hello, thanks for choosing to purchase your bed from Dreams - you're now on your way to your best ever night's sleep. Before you begin building your bed, please take a moment to read through the instructions and make sure that you've got all the relevant parts listed on the following pages.

Assembly tips

Before you begin, it's best to identify all parts and fittings to build your bed. We advise laying these out on the floor to check you have everything, and familiarising yourself before building.

Top tip

We recommend that you build your new bed in the room you'd like it to be located - this will help prevent any risk of damage to your newly built bed whilst moving it.

Safety and care

It's really important to ensure children and animals are kept away from the assembly area, as there are small components used in this bed which could present a choking hazard. All plastic and wrapping materials should also be kept away from children and animals to prevent any risk of suffocation.
To keep your little ones busy, there is a colouring page inside the back cover.

Help and support

At Dreams, it's our mission to give the whole nation a great night's sleep - this means that the quality of our products is of utmost importance to us. If there are any issues with your product or any missing parts, please visit our website at www.dreams.co.uk/help

Recycling

Please ensure that packaging is disposed of in a safe and environmentally friendly way, and recycle where possible. Our assembly instructions are printed on recycled paper. Please keep your assembly instructions safe to refer back to in the future.

OTTOMAN SAFETY WARNINGS

- IMPORTANT – READ CAREFULLY – RETAIN FOR FUTURE REFERENCE
- You must ensure that the mattress is on the bed frame before operating the lift mechanism – Failure to do so could result in injury.
- Keep hands clear of the mechanism when opening or closing the ottoman.
- Beware of entrapment – Never reach in through the mechanism to access the storage area.
- Always ensure that the ottoman is FULLY opened before accessing the storage area.
- Do not exceed the maximum weight as specified in the table below:

Mattress compatibility to use

BED	BED SIZE	MIN WEIGHT (Kg)	MAX WEIGHT (Kg)
DUKE & REIGN	DOUBLE	25	70
DUKE & REIGN	KING	20	55
DUKE & REIGN	SUPER KING	40	70

Parts

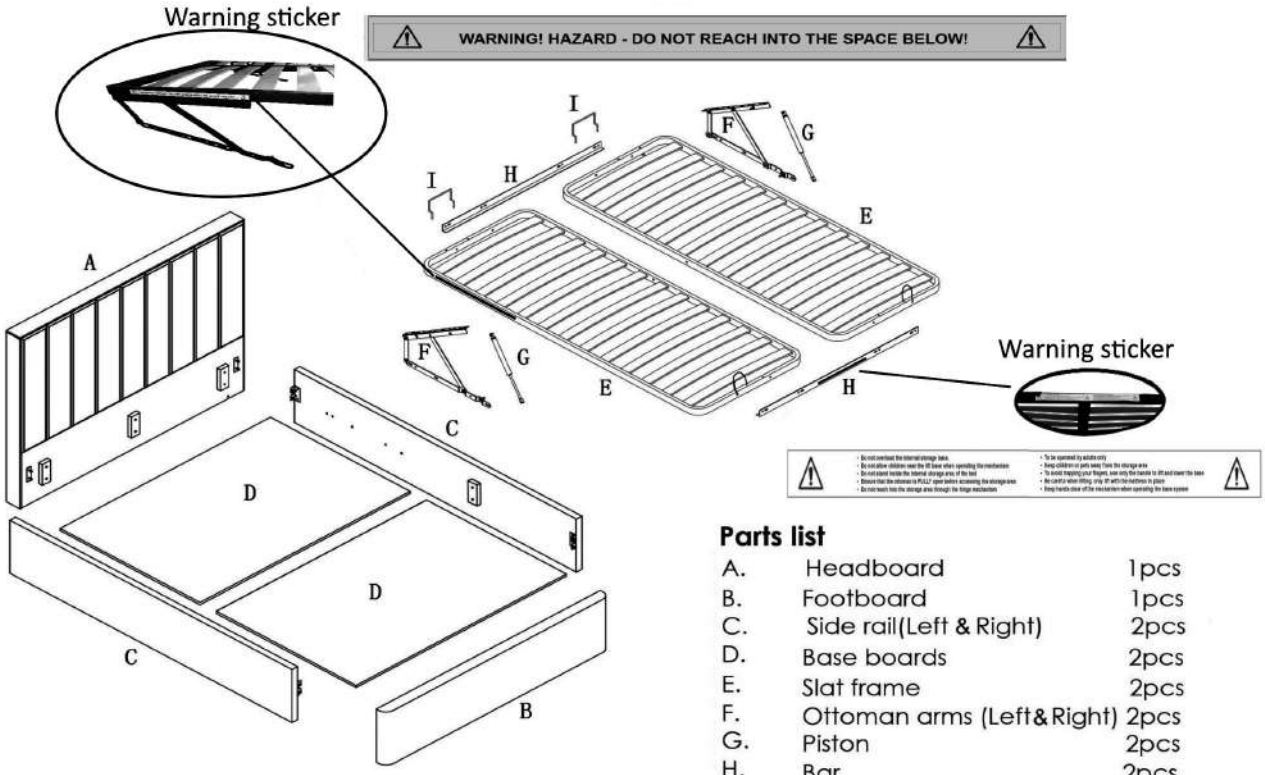

Parts list

A.	Headboard	1pcs
B.	Footboard	1pcs
C.	Side rail(Left & Right)	2pcs
D.	Base boards	2pcs
E.	Slat frame	2pcs
F.	Ottoman arms (Left&Right)	2pcs
G.	Piston	2pcs
H.	Bar	2pcs
I.	Mattress stopper	2pcs

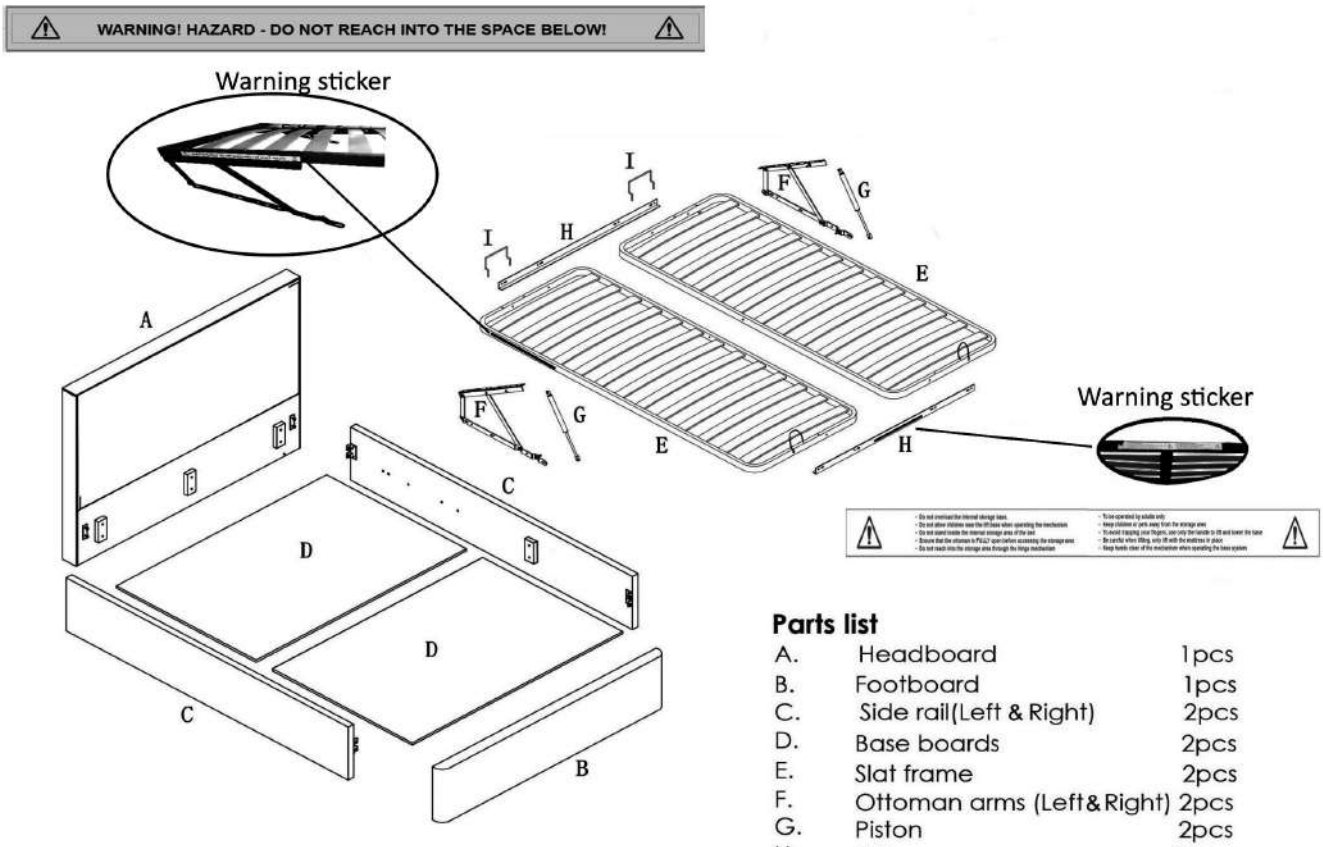

Parts list

A.	Headboard	1pcs
B.	Footboard	1pcs
C.	Side rail(Left & Right)	2pcs
D.	Base boards	2pcs
E.	Slat frame	2pcs
F.	Ottoman arms (Left&Right)	2pcs
G.	Piston	2pcs
H.	Bar	2pcs
I.	Mattress stopper	2pcs

Fittings

Please check you have all the parts listed below with your product:

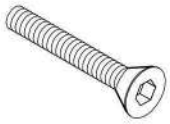

H1.M6 x 55mm x4pcs

H2.M6 Nut x16pcs

H3.Lock x 4pcs

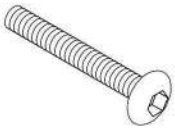

H4.M6 x 70mm x4pcs

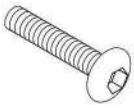

H5.M6 x 40mm x8pcs

H6.Metal Washer x16pcs

H7.4mm Allen key x 1pc

H8. M6 x 30mm x10pcs

H9.Spanner x 1pc

Velvet Glove x 1pc

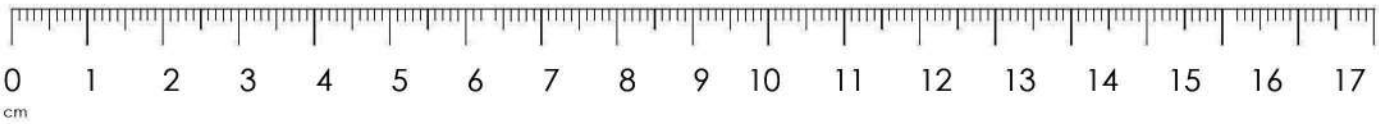

Tools required

Please check you have all these below:

Scissors

Tape measure

Cross head screwdriver

Ottoman Assembly

1

(1).Attach the side rail (C)to the headboard(A)
Loosley screw in the bolts but do not tighten them 100%

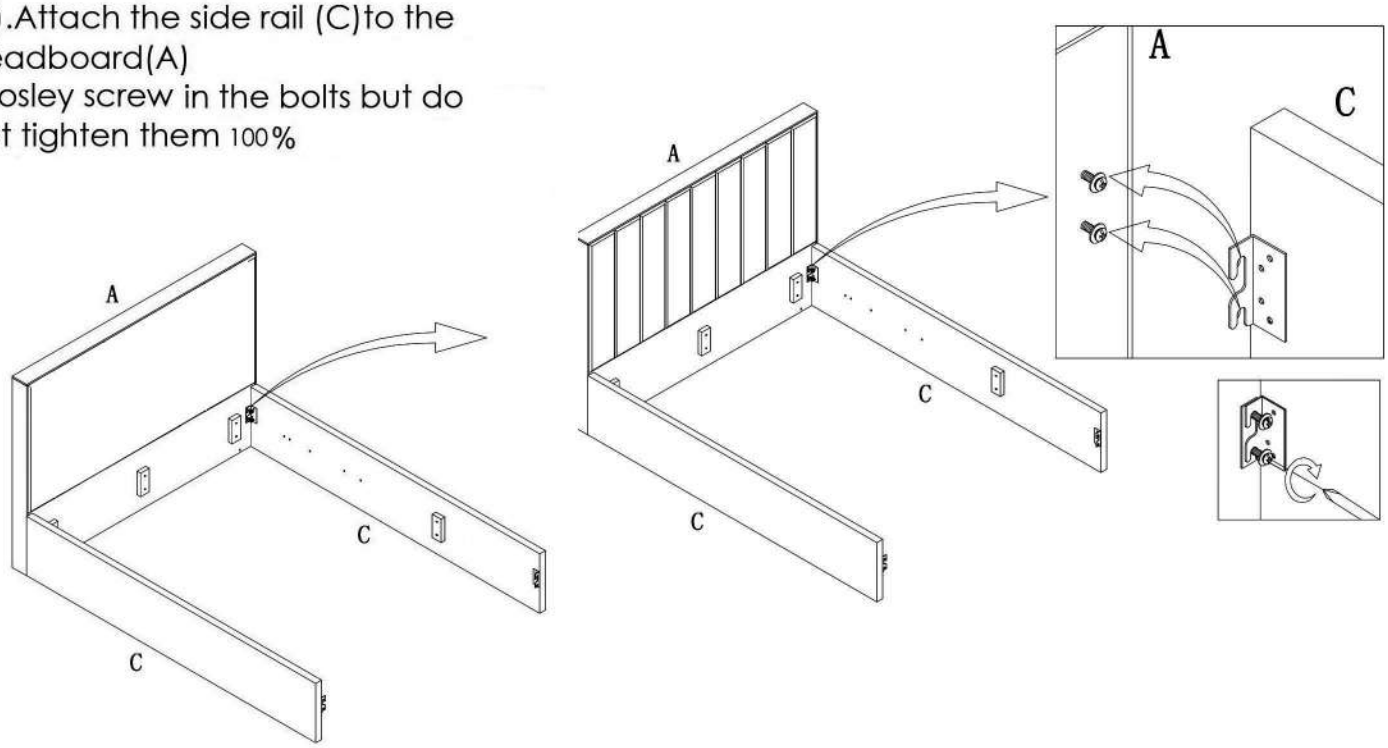

2

(1).Attach the footboard (B) in the same way as the headboard. (A)

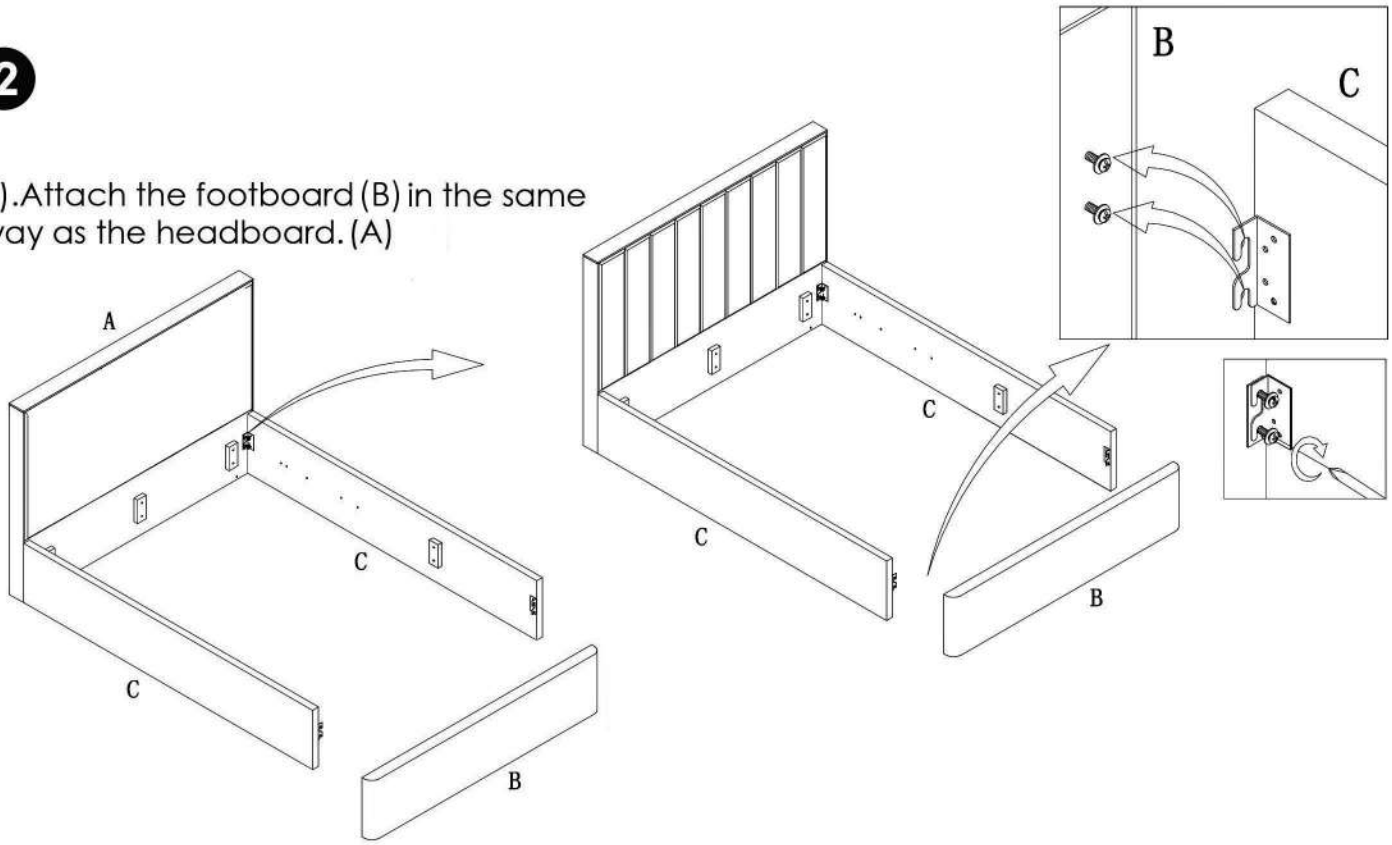

Ottoman Assembly

3

(1).Make certain the bed is squared up as shown in the diagram , then fully tighten all the bolts.

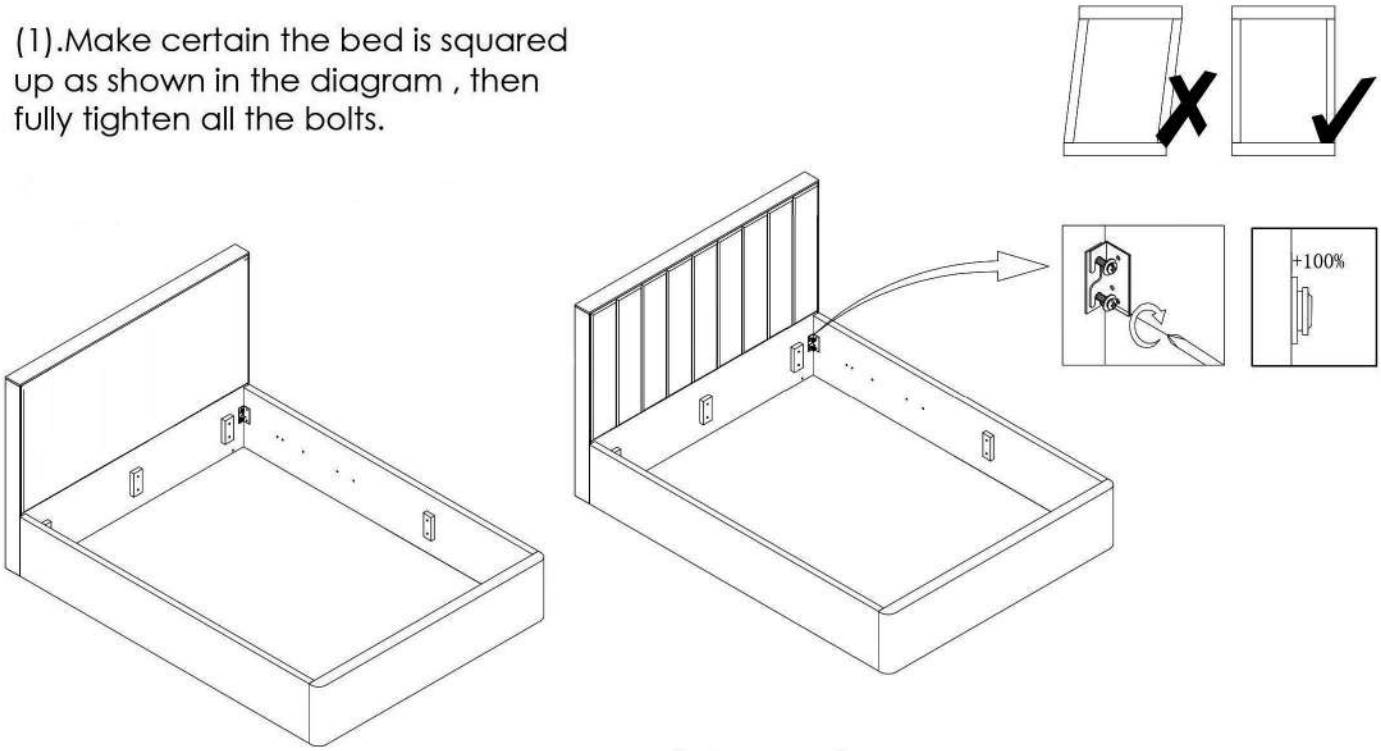

4

(1).Place the base boards (D) into the bottom of the bed.

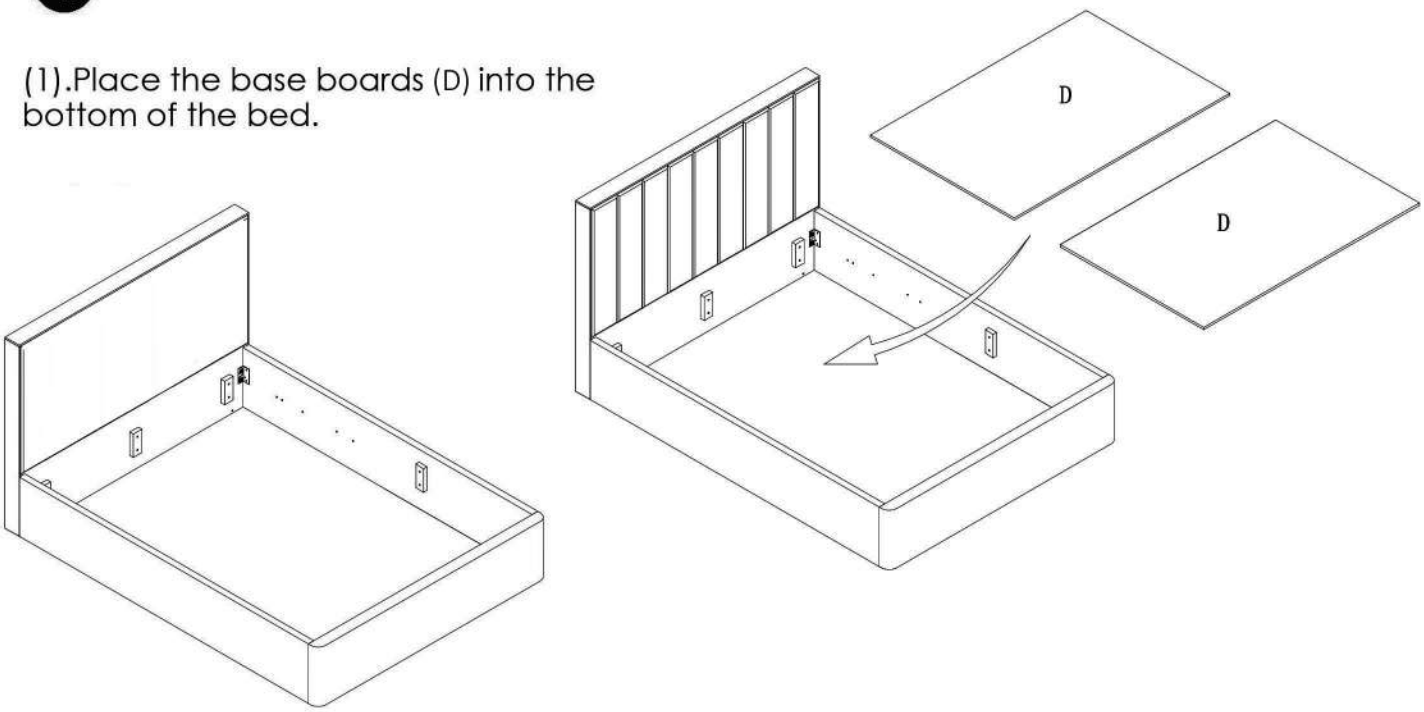

Ottoman Assembly

5

(1).Attached the piston to the ottoman arm,make sure the piston is assembled the correct way round,the black section attaches to the top of the frame (as per the image).

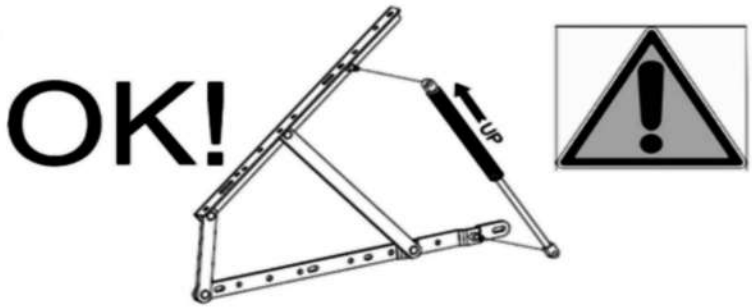

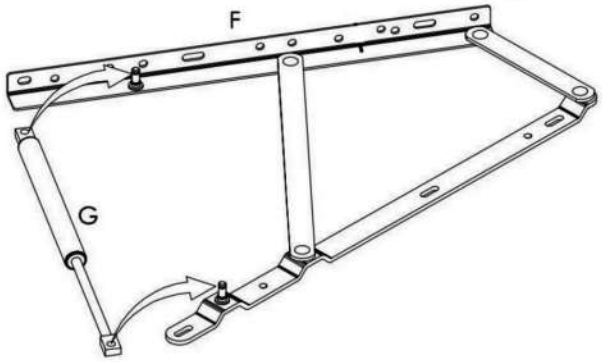

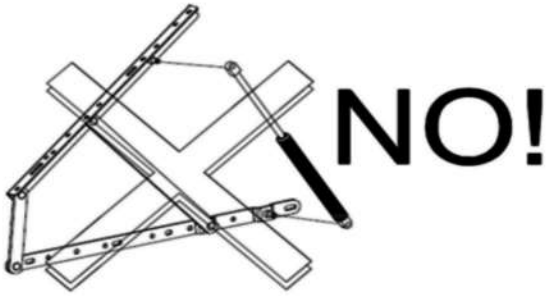

6

(1).Attach the lock (H3) to the ottoman arm (F).

H3. Lock x 4pcs

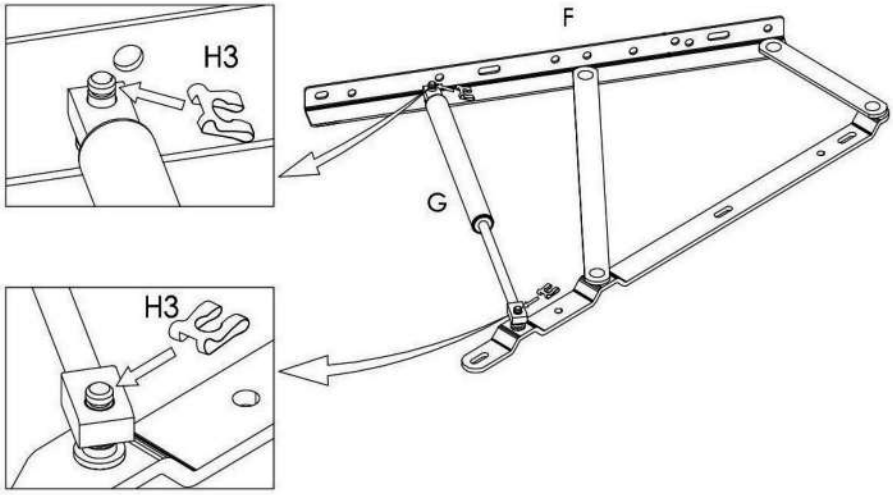

Mattress compatibility to use

BED	BED SIZE	MIN WEIGHT (Kg)	MAX WEIGHT (Kg)
DUKE & REIGN	DOUBLE	25	70
DUKE & REIGN	KING	20	55
DUKE & REIGN	SUPER KING	40	70

Ottoman Assembly

7

(1).Using bolts (H8)fit the ottoman arms to the side rail (C) and fully tighten all the bolts.

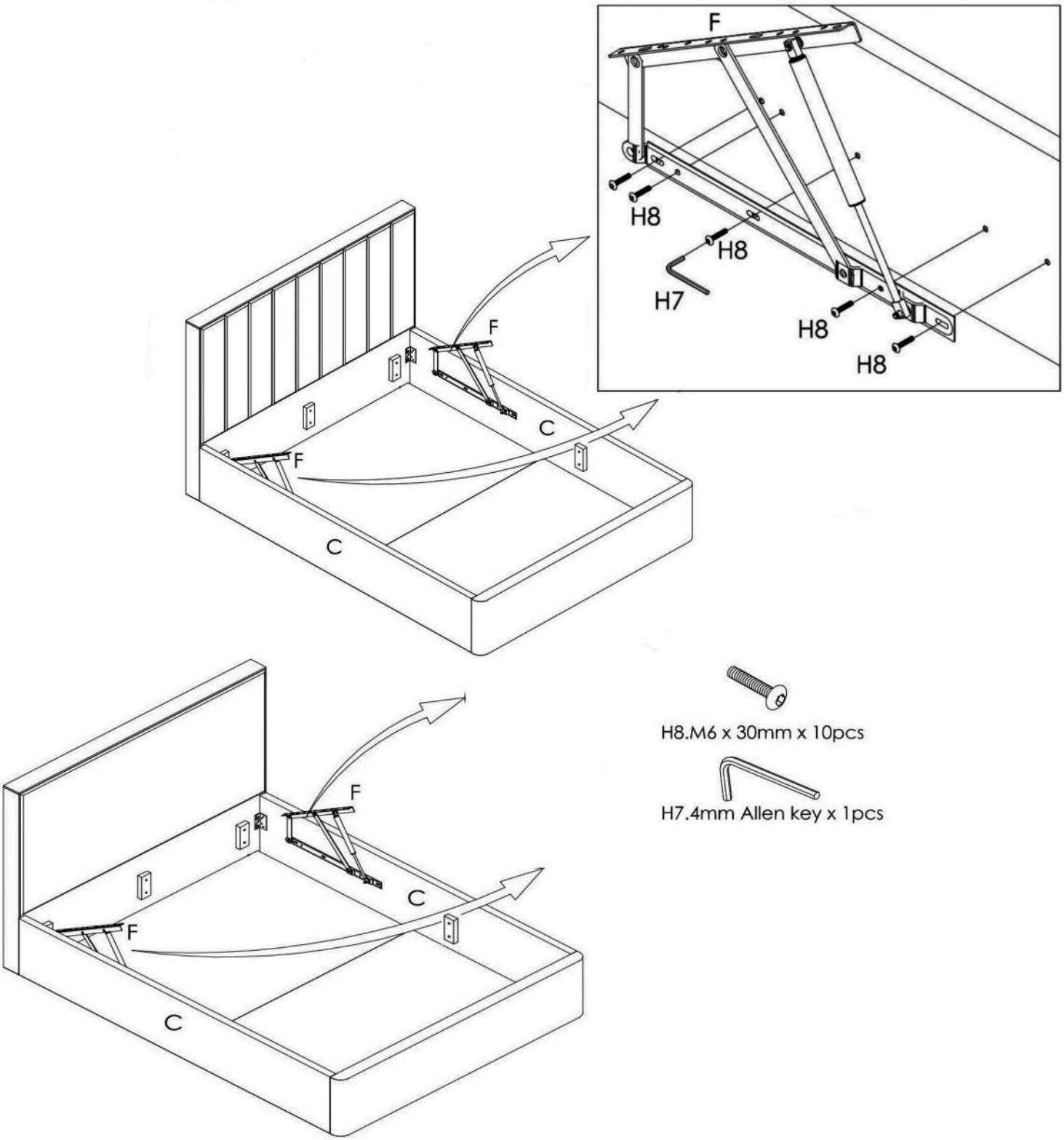

Ottoman Assembly

8

(1).Attach bar(H) to the slat frame(E). Using bolts(H5),nut(H2),metal washers (H6)fit two bar of the slat frame,using allen key(H7)and spanner (H9)tighten all bolts 100%.

(2)Using bolts(H4),nut(H2),metal washers (H6)fit two slat frame,using allen key(H7) s and spanner (H9)tighten all bolts 100%.

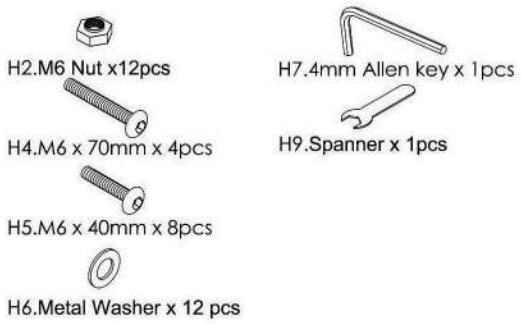

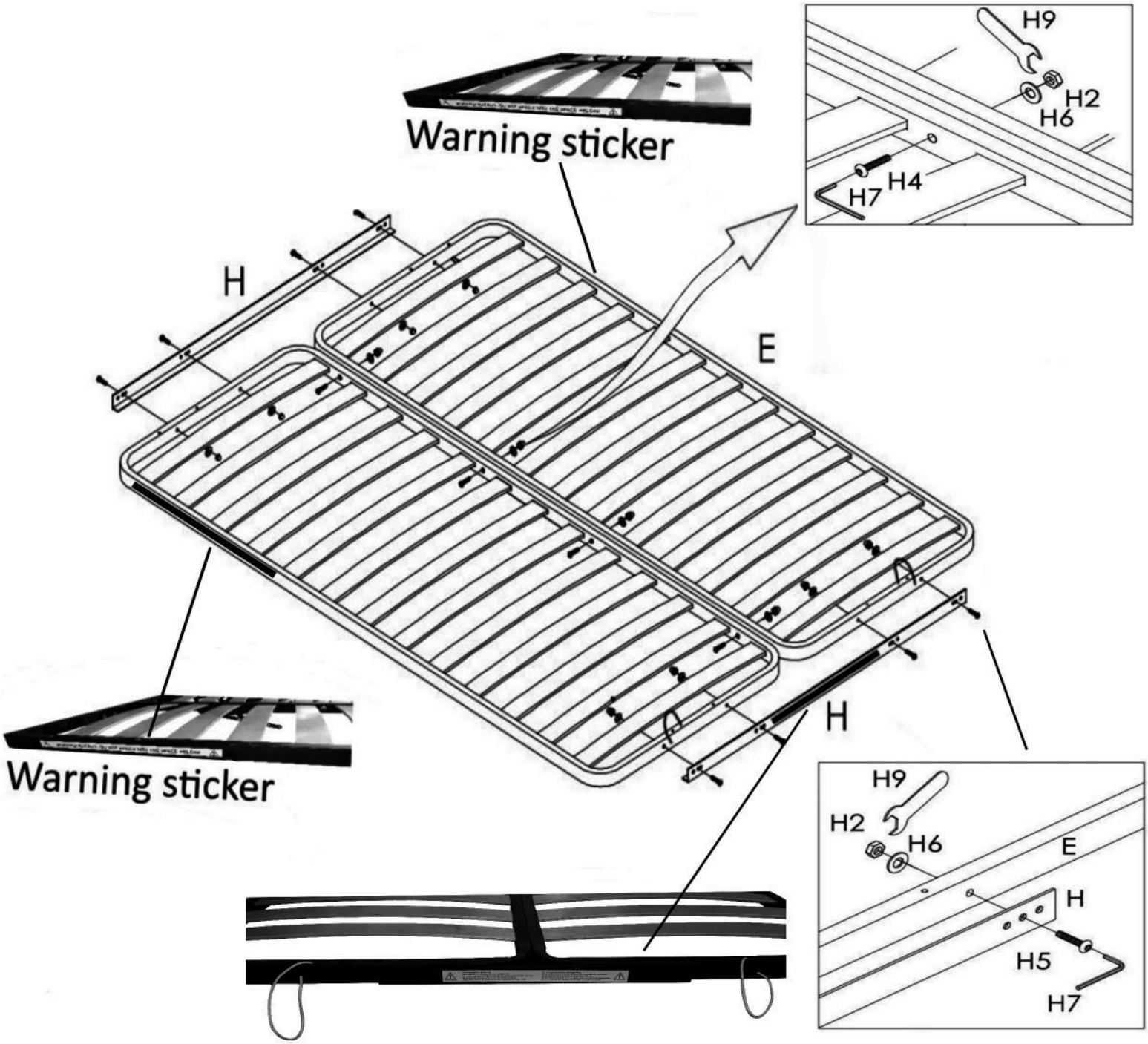

WARNING PAGE

- **You must ensure that the mattress is on the bed frame before operating the lift mechanism – Failure to do so could result in injury.**
- **Keep hands clear of the mechanism when opening or closing the ottoman.**
- **Beware of entrapment – Never reach in through the mechanism to access the storage area.**
- **Always ensure that the ottoman is FULLY opened before accessing the storage area.**
- **Do not exceed the maximum weight as specified in the table below:**

Mattress compatibility to use

BED	BED SIZE	MIN WEIGHT (Kg)	MAX WEIGHT (Kg)
DUKE & REIGN	DOUBLE	25	70
DUKE & REIGN	KING	20	55
DUKE & REIGN	SUPER KING	40	70

- Use caution when operating, always use the handle when lifting
- Note: This bed uses a pressurised mechanism.
- To be operated by adults only
- Please ensure that children and pets are kept away from the bed when operating the lift mechanism.
- Keep children and pets away from the storage area.
- Do not overload the internal storage base.
- Do not stand inside the internal storage area of the bed
- Before removing the mattress secure the frame to ensure it does not open unexpectedly.
- Do not attempt to lie on the mattress when the ottoman is in the raised position.
- When lifting the ottoman remove all bedding except the fitted sheet.

Ottoman Assembly

9

⚠ WARNING! HAZARD - DO NOT REACH INTO THE SPACE BELOW! ⚠

Warning sticker

(1).Attach the slat frame (E)to the ottoman arms(F).
Using two bolt sets on each side (H1, H2,H6,H7,H9), fix the slat frame to the arm once all 4 bolt sets are in place,please then fully tighten all the bolts.

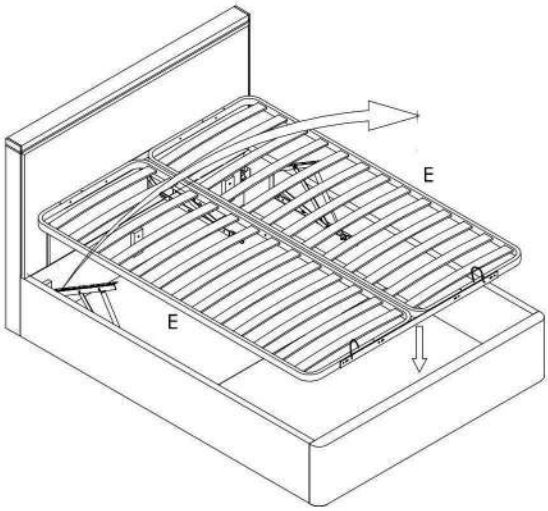

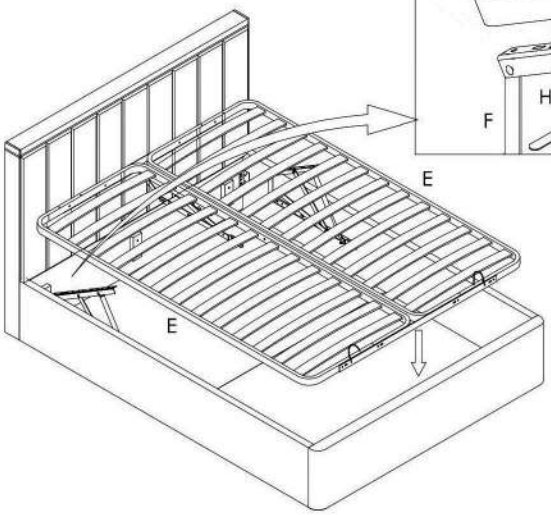

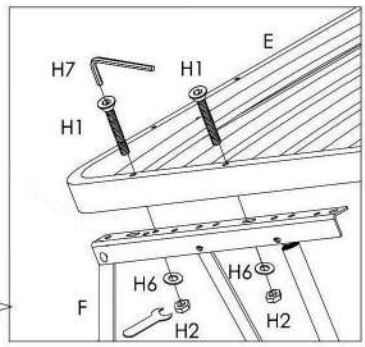

H1.M6 x 55mm x 4pcs

H2.M6 Nut x4pcs

H6.Metal Washer x 4pcs

H7.4mm Allen key x 1pcs

H9.Spanner x 1pcs

10

(1).Push mattress stoppers(I)x 2 into metal frame.
(2).Push rope(J)x 2 into metal frame.

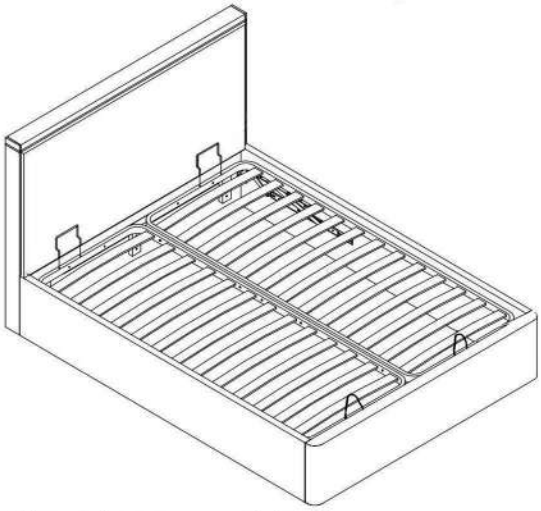

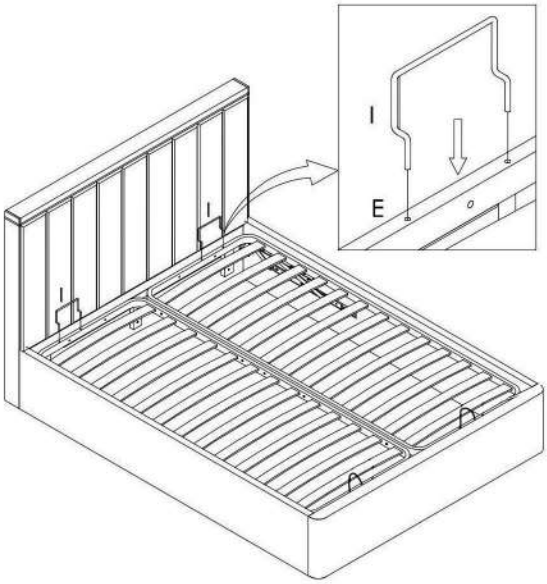

11

Using the glove provided, brush out any light or dark marks visible on the material.

Parts

Sprung slats

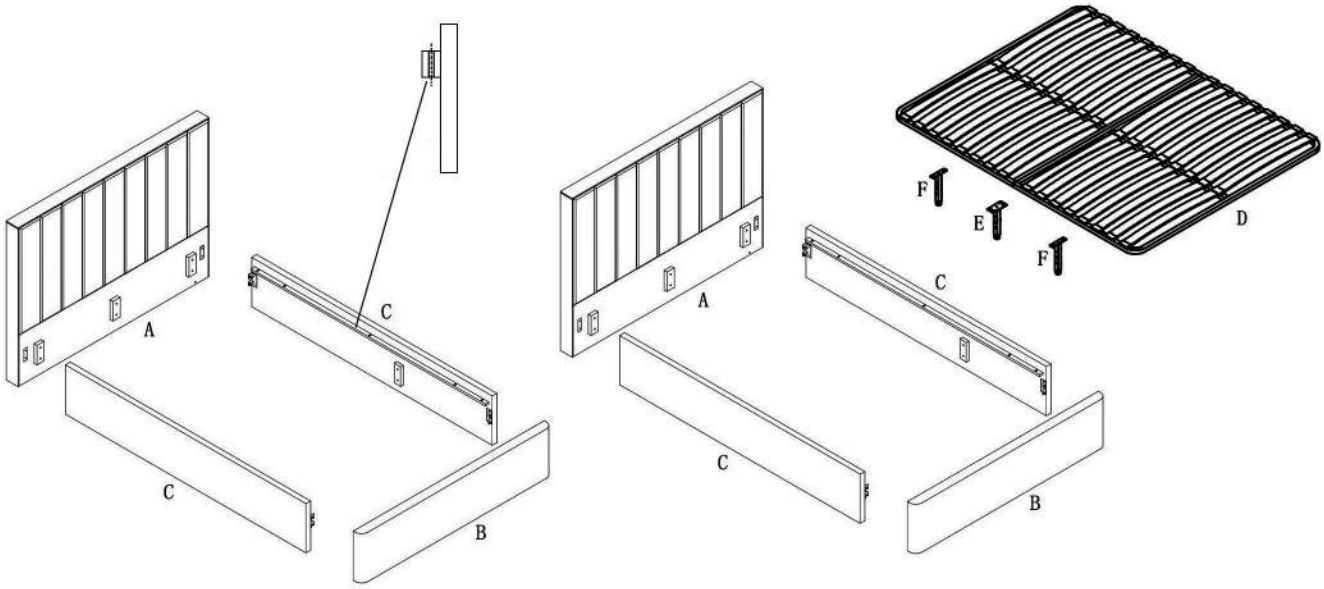

Sprung slats

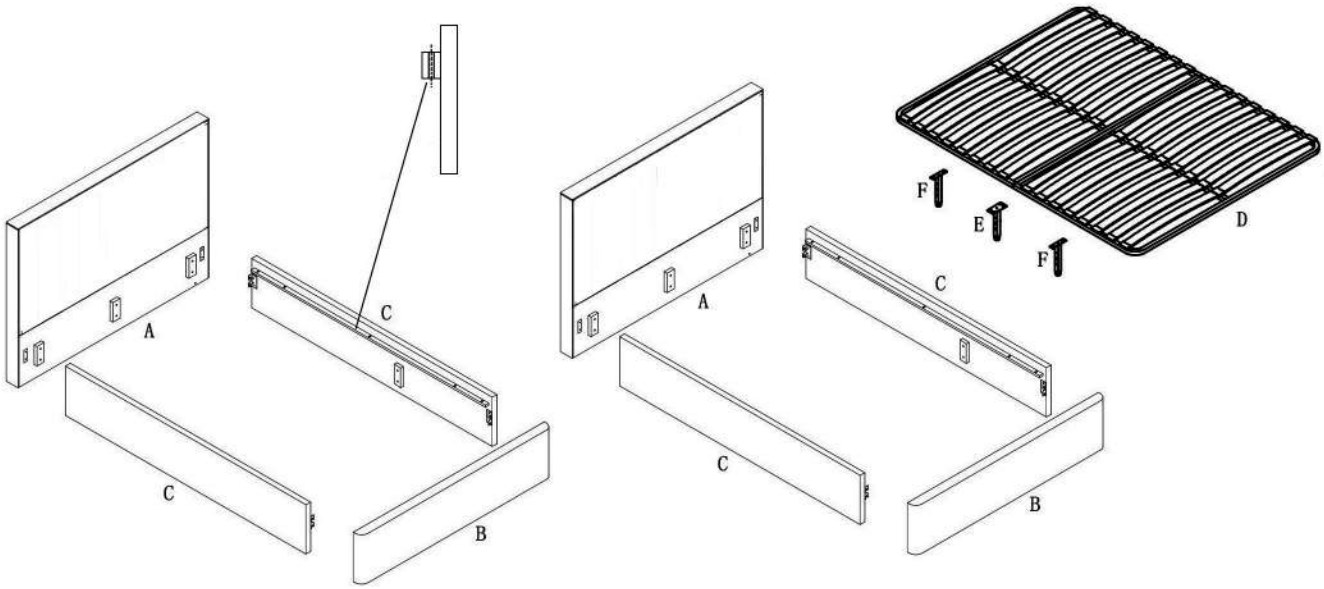

Parts list

A.	Headboard	1pcs
B.	Footboard	1pcs
C.	Side rails(Left & right)	2pcs
D.	Sprung slats	1pcs
E.	Support leg 1	1pcs
F.	Support leg 2	2pcs

Base boards are only required on the Ottoman Bed and are not required on sprung slats and sleep motion beds

Fittings

Please check you have all the parts listed below with your product:

H1. M6X80 mm x 4 pcs

H2. M6 Hex Nut x4 pcs

H3 Metal Washer x 8 pcs

H4. 4mm Allen key x2pcs

H9.Spanner x 1pc

Velvet Glove x 1pc

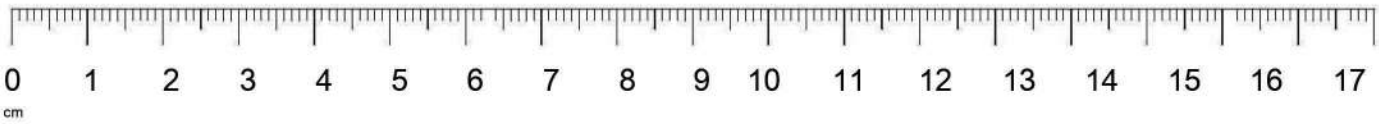

Tools required

Please check you have all these below:

Scissors

Tape measure

Cross head screwdriver

Sprung slat assembly

1

(1).Attach the side rail(C)to the headboard(A)locating the brackets Loosley screw in the bolts but do not tighten them 100% yet.

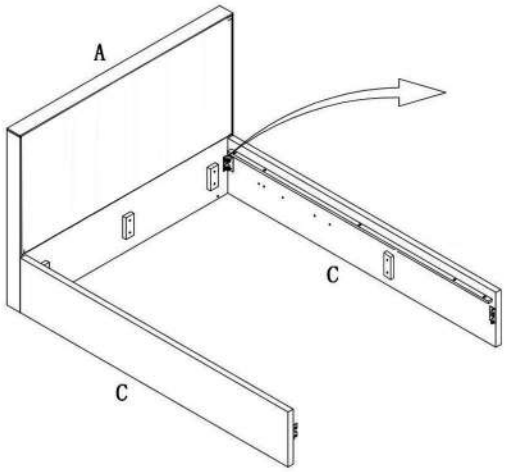

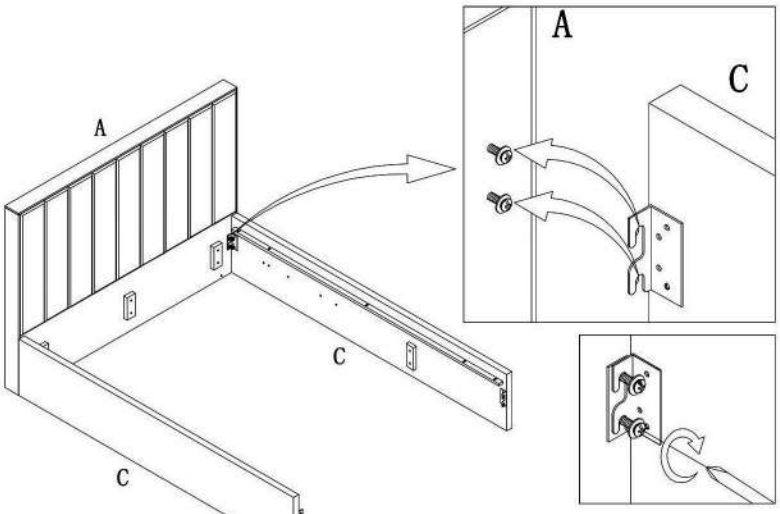

2

(1).Attach the footboard in the same way as the headboard.

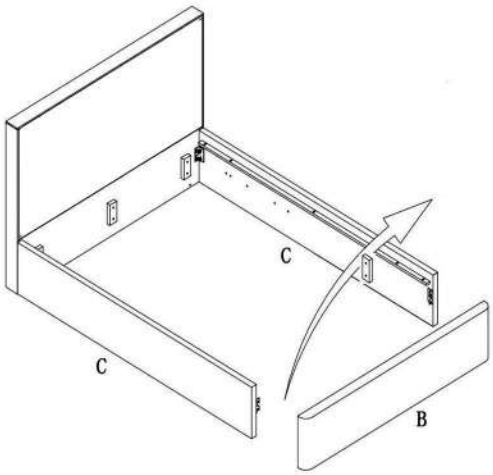

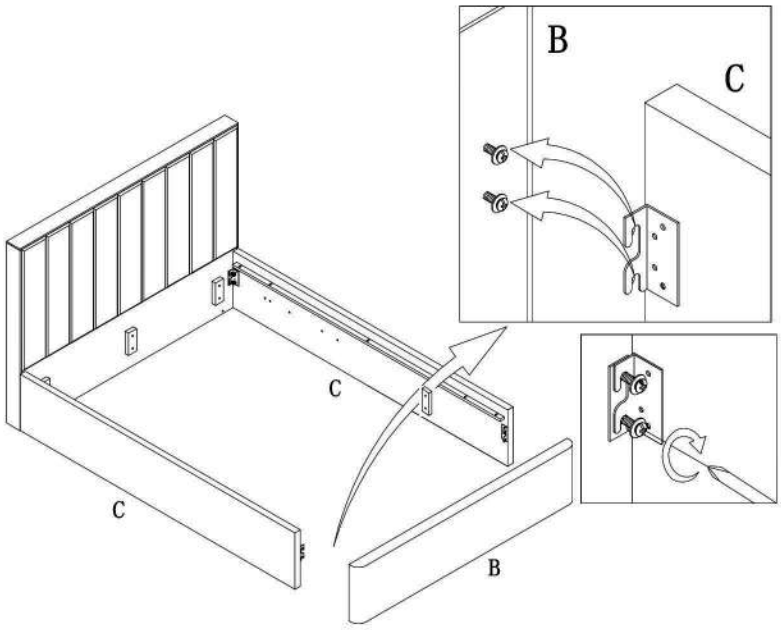

3

(1).Make certain the bed is squared up as shown in the diagram then fully tighten all the bolts.

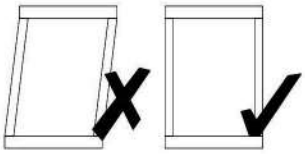

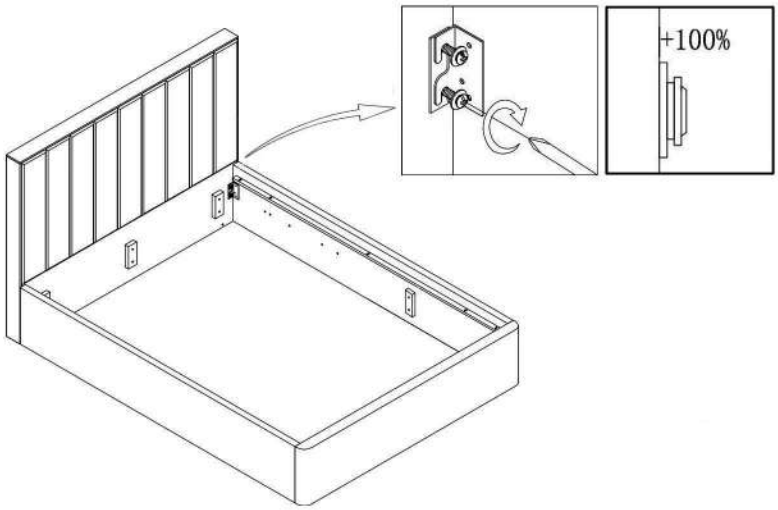

Sprung slat assembly

4

(1) Use the bolt to fix support leg onto The slat frame.Please note that these bolts are to be found inside the slat frame box. Carefully locate the slats onto the unit.

(2) Use bolt M6x80 mm and nut M6 with washers to fix the unit, using Spanner and Allen key.

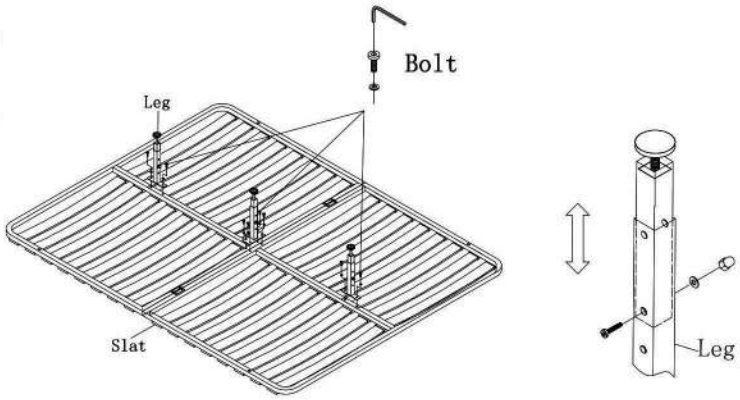

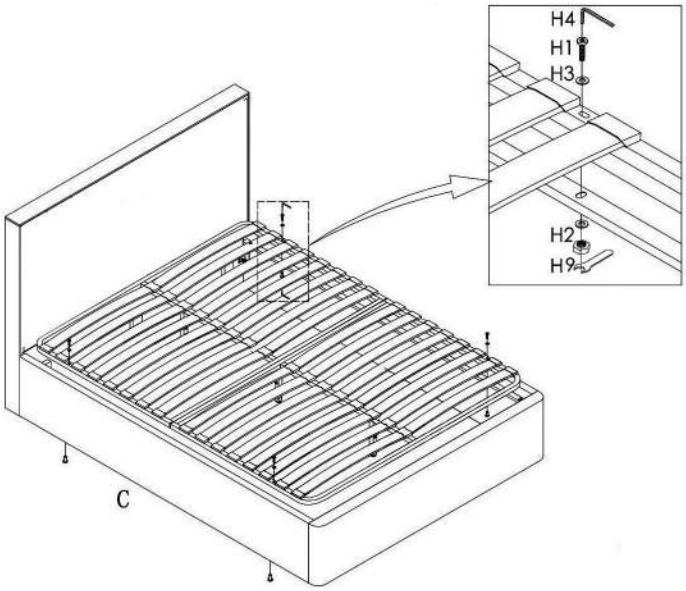

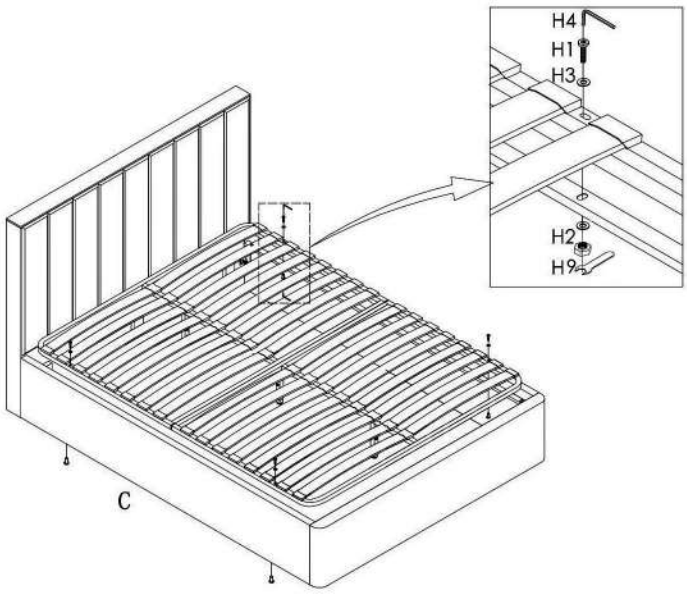

H1. M6x80 mm x 4 pcs

H4. 4mm Allen key x 1 pcs

H2. M6 Hex Nut x 4 pcs

H9. Spanner for m6 screw x1 pcs

H3 Metal Washer x 8 pcs

Parts

Sleepmotion

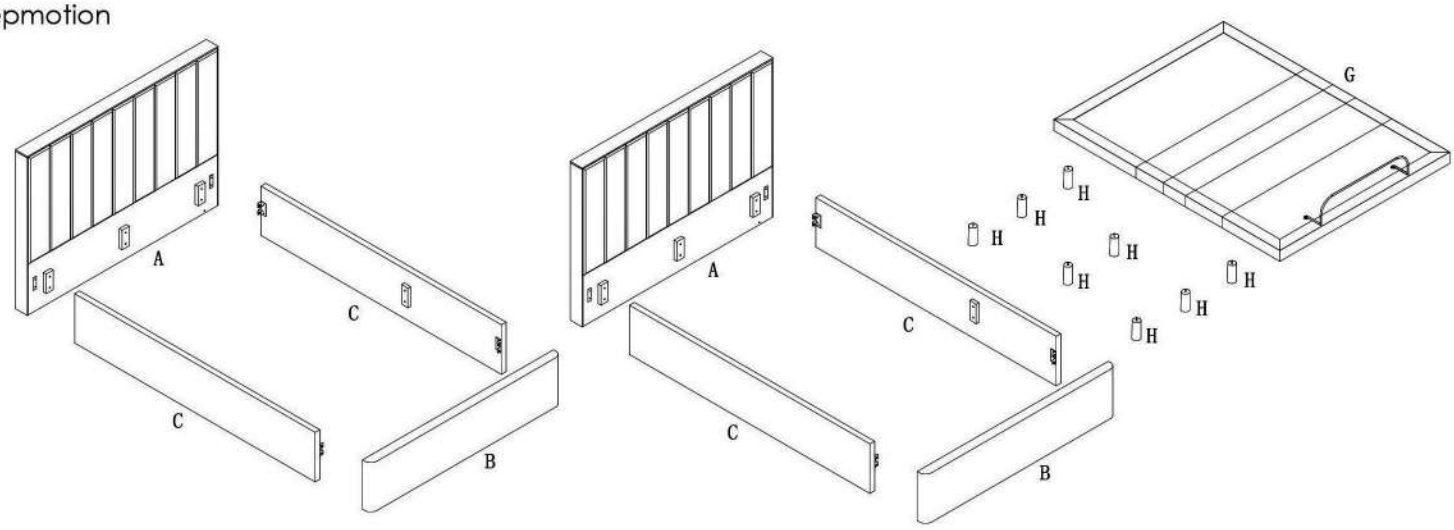

Sleepmotion

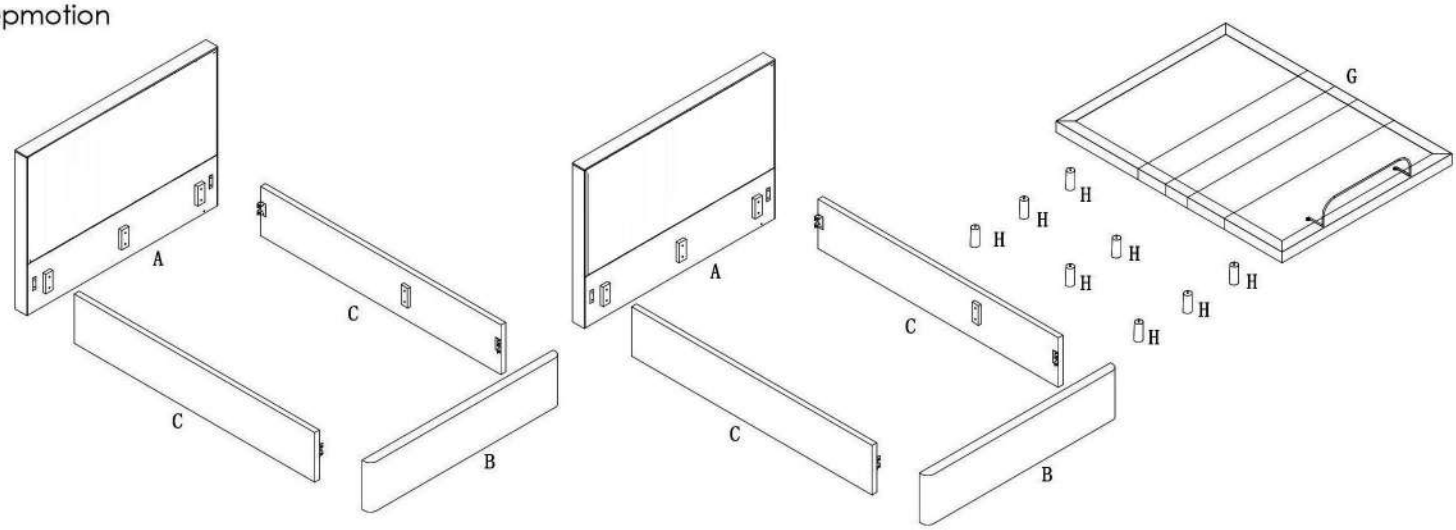

Parts list

		board
A.	Headboard	1pcs
B.	Footboard	1pcs
C.	Side rails(Left/right)	2pcs
D.	Sprung slats	1pcs
G.	Sleepmotion	1pcs
H.	Legs	8pcs

Base boards are only required on the Ottoman Bed and are not required on sprung slats and sleep motion beds

Fittings

Please check you have all the parts listed below with your product:

H. Legs x 8 pcs

Velvet Glove x 1 pc

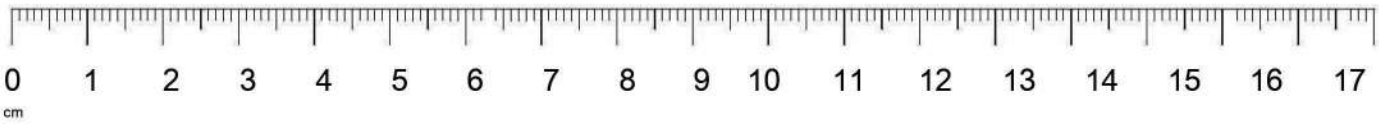

Tools required

Please check you have all these below:

Scissors

Tape measure

Cross head screwdriver

Sleepmotion assembly

Please ensure you have built your sleepmotion base first (please refer to instructions in your sleepmotion box to build the base). Please construct your sleep motion with the 15cm leg and then follow the below instructions to build the bed frame.

1

(1).Screw in the legs(H)and put bed base in the position inwhich it will be used.

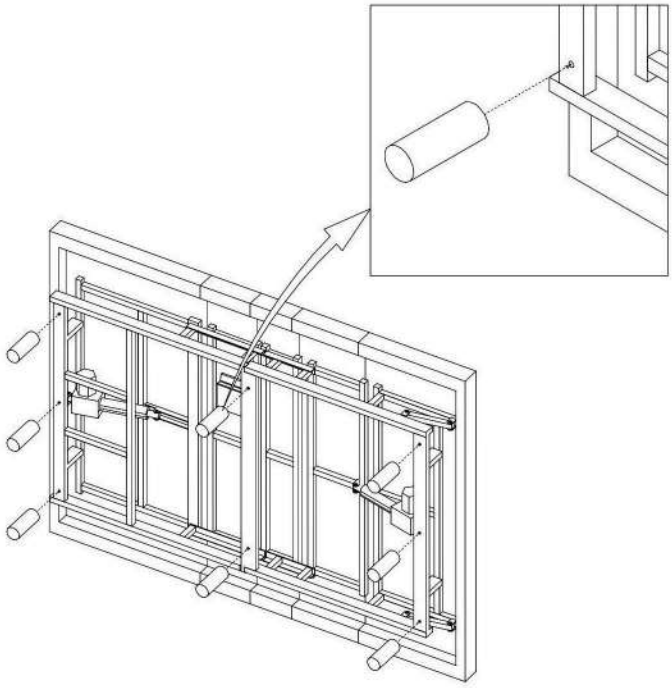

2

(1).Attach the side rail(C)to the headboard(A)
Loosley screw in the bolts but do not tighten them 100% yet.

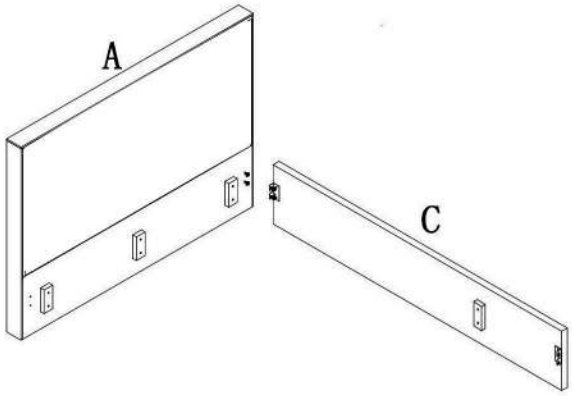

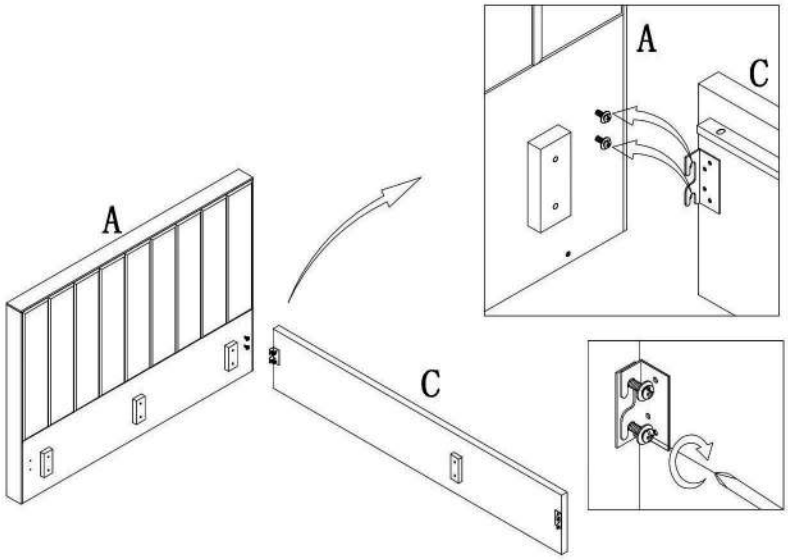

Sleepmotion assembly

❸

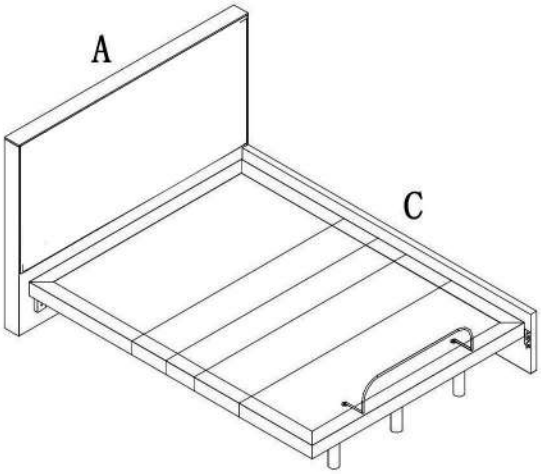

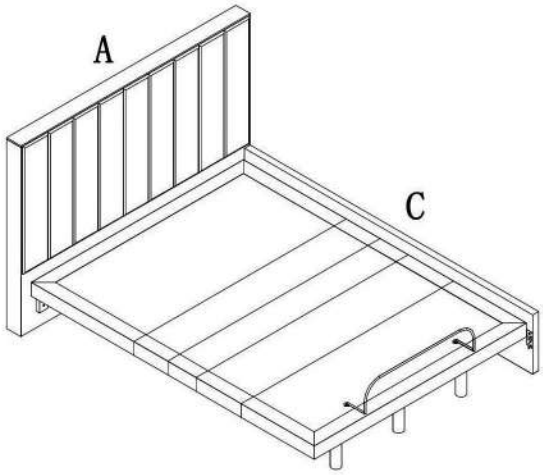

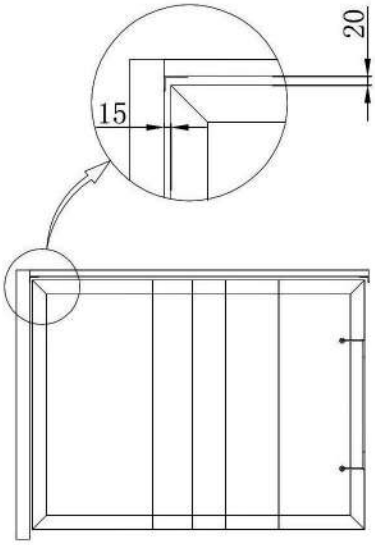

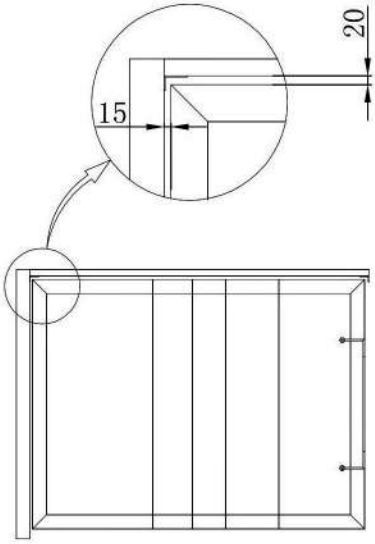

Sleepmotion assembly

4

(1).Raise the head and foot ends of the bed base (G)

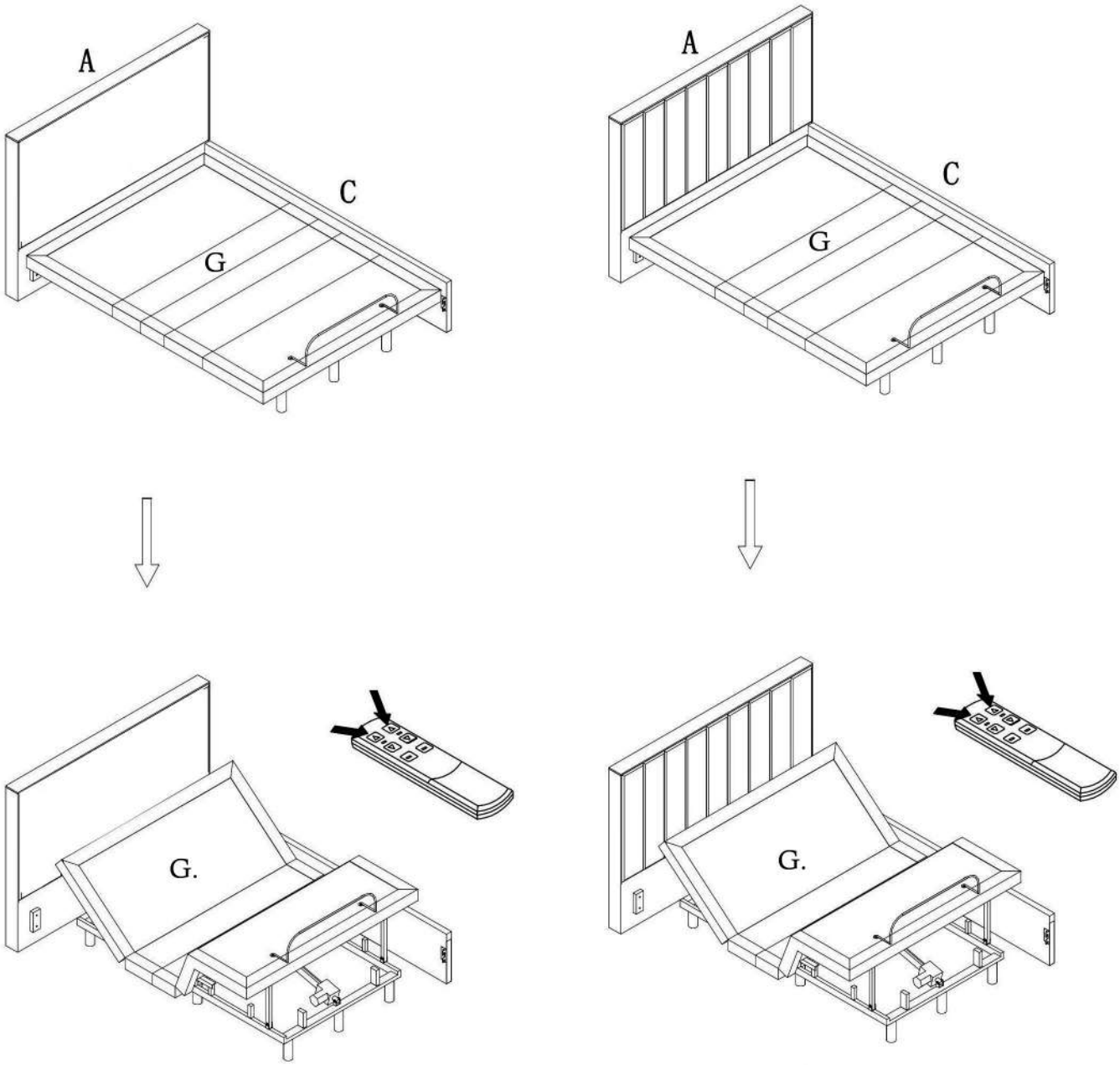

Sleepmotion assembly

5

(1).Position foot end and connect side rail brackets.
(2).Make sure everything is working properly then fit second side rail.
(3).Install the footbard in the same way as the headboard.
(4).Loosely screw in the bolts but do not tighten them 100% yet.

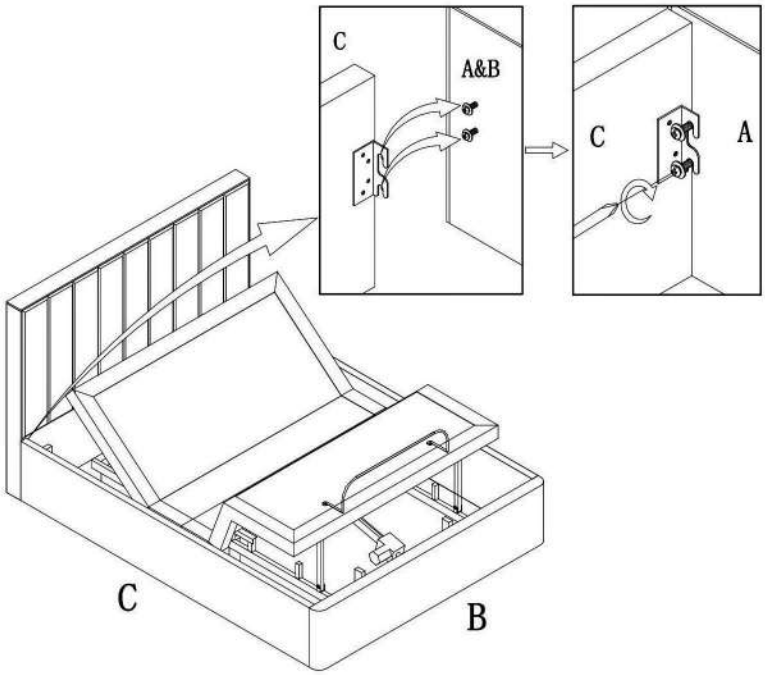

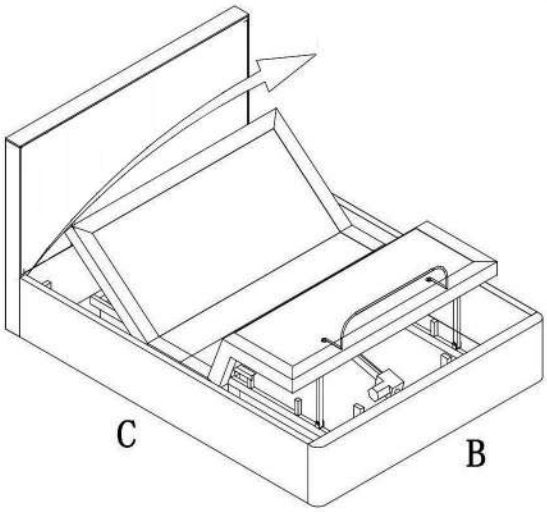

6

(1).Make certain the bed is squared up as shown in the diagram then fully tighten all the bolts.

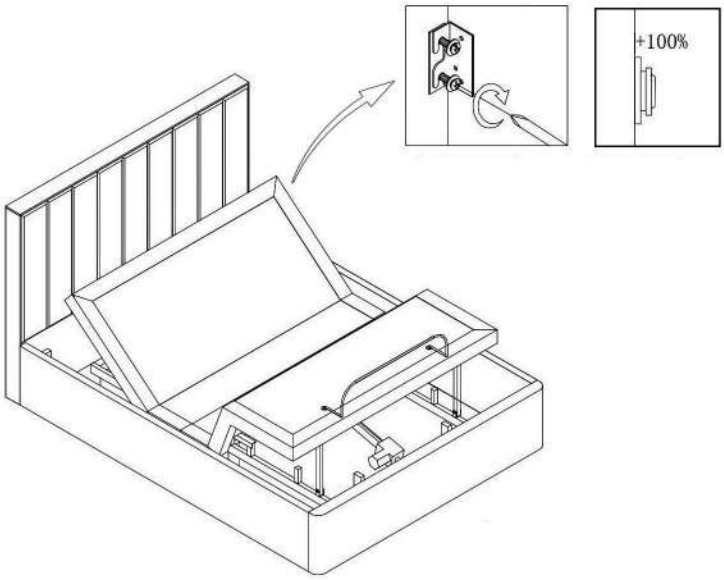

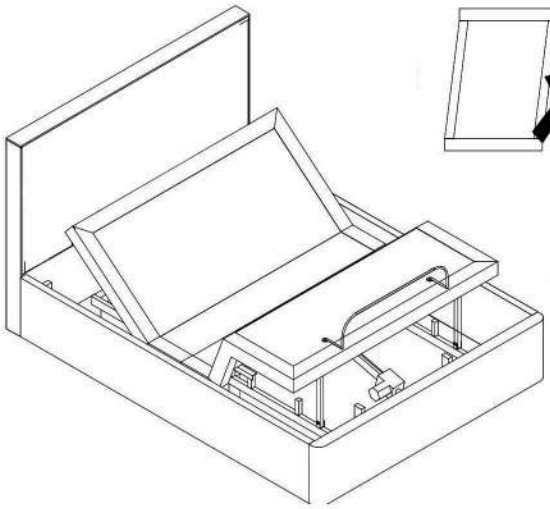

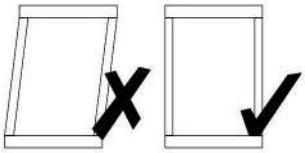

Care and maintenance

Here are some tips to keep your new bed in tip-top condition

Cleaning

To clean your new bed, we'd advise using a warm damp cloth - please do not use abrasive chemicals or bleach as this may damage the product.

Checking and moving

Periodically we recommend you check that the screws or fixtures haven't become loose, over time. To move your new bed, we recommend lifting it where possible, as dragging or pushing it could cause damage to your flooring.

Wood

Please note each of our wooden pieces are unique, meaning that markings and shade can vary slightly between beds. Over a period of time, the wood might lighten or fade slightly due to light exposure.

Fabric

Please note depending on the lighting, positioning and surroundings of your room, the colour of the fabric can sometimes appear slightly different. Over a period of time, the colour might lighten or fade slightly due to light exposure.

Velvet

The fittings to your new bed were supplied in a velvet bag. This can also be used as a glove to help bush the pile of the velvet in one direction to remove any light or dark marks.

Metal

Metal tends to be more resilient to everyday wear and tear. We recommend to gently dust your metal furniture and keep it dry to maintain its look.

Thank you for shopping with us - we hope you have a great night's sleep

Sleep well

Little dreamers

Keep the little ones entertained while you assemble your new purchase.

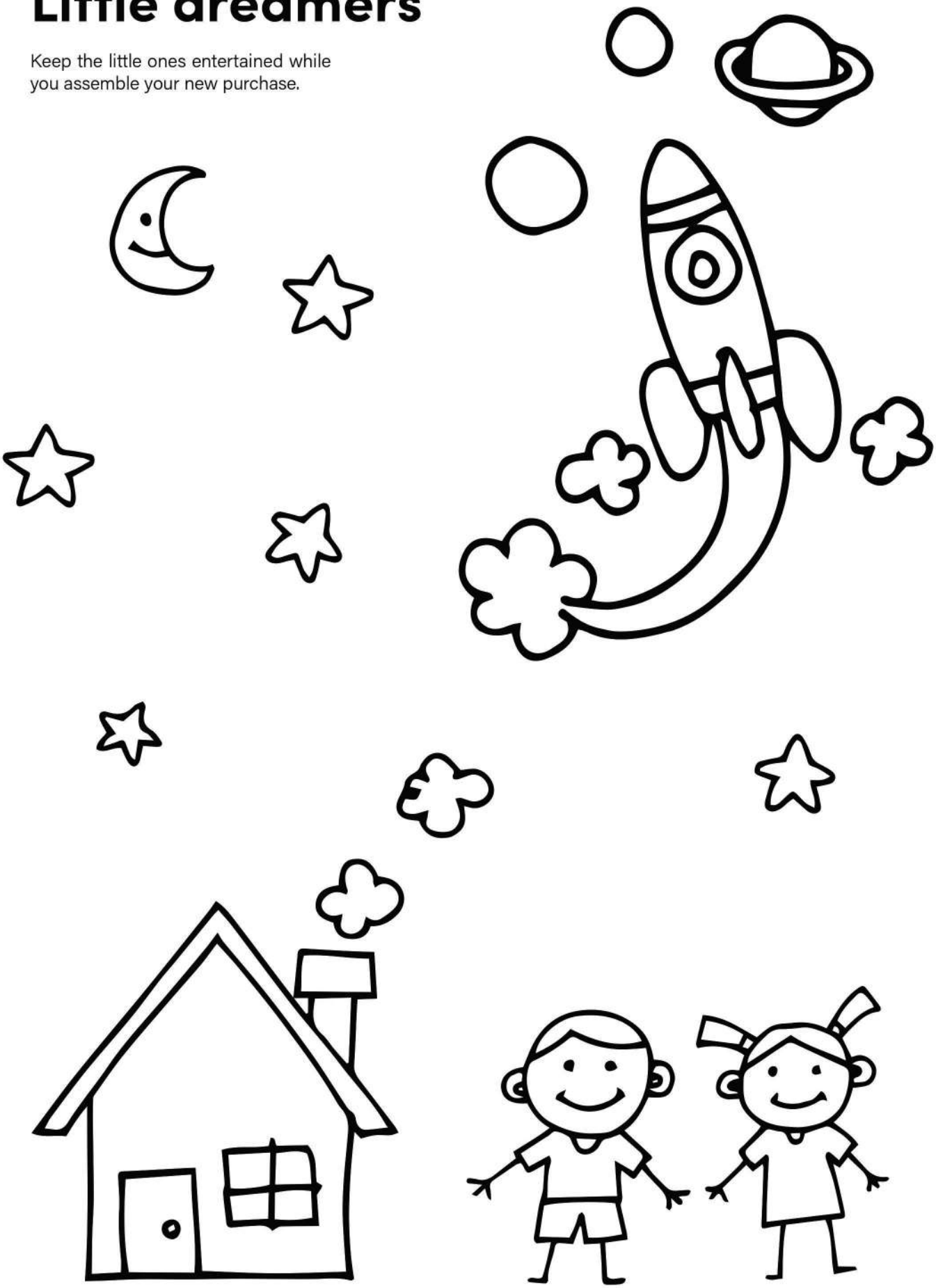

TEMPUR®

Dreams