LUCIA LIFESTYLE BED SLEEPMOTION 200i

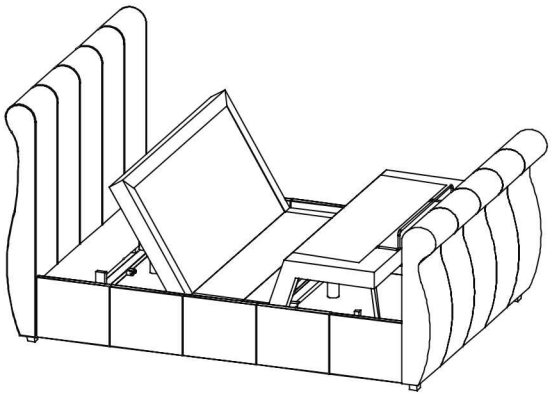

PLEASE READ this sheet prior to assembly to familiarise yourself with the various stages of construction. Carefully open the cartons supplied and check the contents against the parts and fittings check list.

Do not destroy any of the packaging until you are certain that you have all the necessary parts for the assembly.

Please ensure that the packaging is disposed of in a safe, environmentally friendly way.

CAUTION: There are small components used in the construction of this unit. During assembly, these should be kept away from young children to avoid the danger of choking.

BEFORE STARTING ASSEMBLY PLEASE REFER TO THE OWNERS MANUAL SUPPLIED WITH YOUR SLEEPMOTION 200i BED BASE AND FOLLOW THE INSTRUCTIONS TAKING NOTE OF ANY SAFETY PRECAUTIONS OR OPERATIONAL SAFETY REQUIREMENTS OF THE INSTALLATION.

BUILD THE BED BASE FIRST USING ONLY THE EIGHT LONGER LEGS 6" (15 cm), SEE STAGE 1.

IMPORTANT: PLACE THE BASE IN FINAL POSITION IN THE ROOM OF USE, CONNECT THE POWER AND CHECK THE OPERATION THEN STEP BY STEP FOLLOW THE BED ASSEMBLY INSTRUCTIONS BELOW, TO BUILD THE BEDSTEAD AROUND THE SLEEPMOTION 200i BED BASE.

Parts Identification

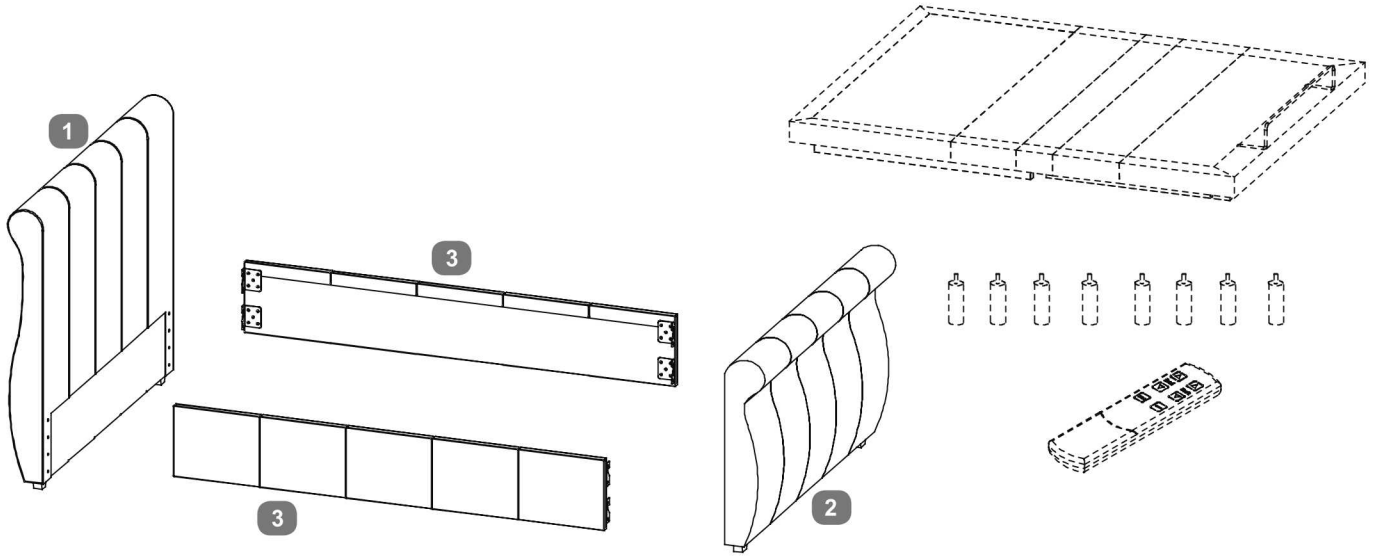

PARTS SHOWN IN DOTTED LINES ARE PACKED IN THE SLEEPMOTION BED BASE CARTON

Parts Checklist

Ref.	Description	Qty
1	Headboard	1
2	Footboard	1
3	Side Rails	2

Fittings Checklist

HARDWARE NEEDED FOR FIXING SIDE RAILS TO HEADEND & FOOTEND PACKED IN SLEEPMOTION SIDE RAIL PACK 3 - HARDWARE PACK (A)

Ref.	Description	Qty
A	Bolts (M8x30mm) for fitting side rails (3&4) to headboard & footboard (1&2)	x16
B	Spring Washers (for M8 bolts)	x16
C	Flat Washers (for M8 bolts)	x16
D	Allen Key (for M8 bolt)	x1

Additional Tools Required

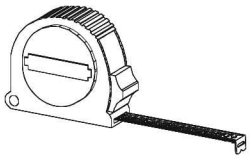

Tape Measure

Care & Maintenance

In the unlikely event of missing or damaged parts, please contact the customer service team on 0344 292 00 00. When calling this number, please quote the part code reference numbers shown in this leaflet when requesting spare or replacement parts.

General Hints & Tips

Please retain your assembly instruction and tools provided for future use.
Periodically check that all bolts are still tight.

Assembly requires two persons.

Approximate time to assemble this product

1.5 HRS

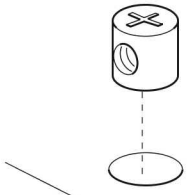

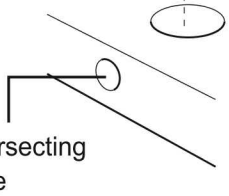

When they are supplied and are part of the assembly of this bed, ensure that the barrel nuts are fitted the correct way so the hole in the nut is facing towards the intersecting hole in the panel.

We recommend the bed is assembled in the room it shall be located in.

Screw in the Legs and put Bed Base in the position in which it will be used

Stage 1

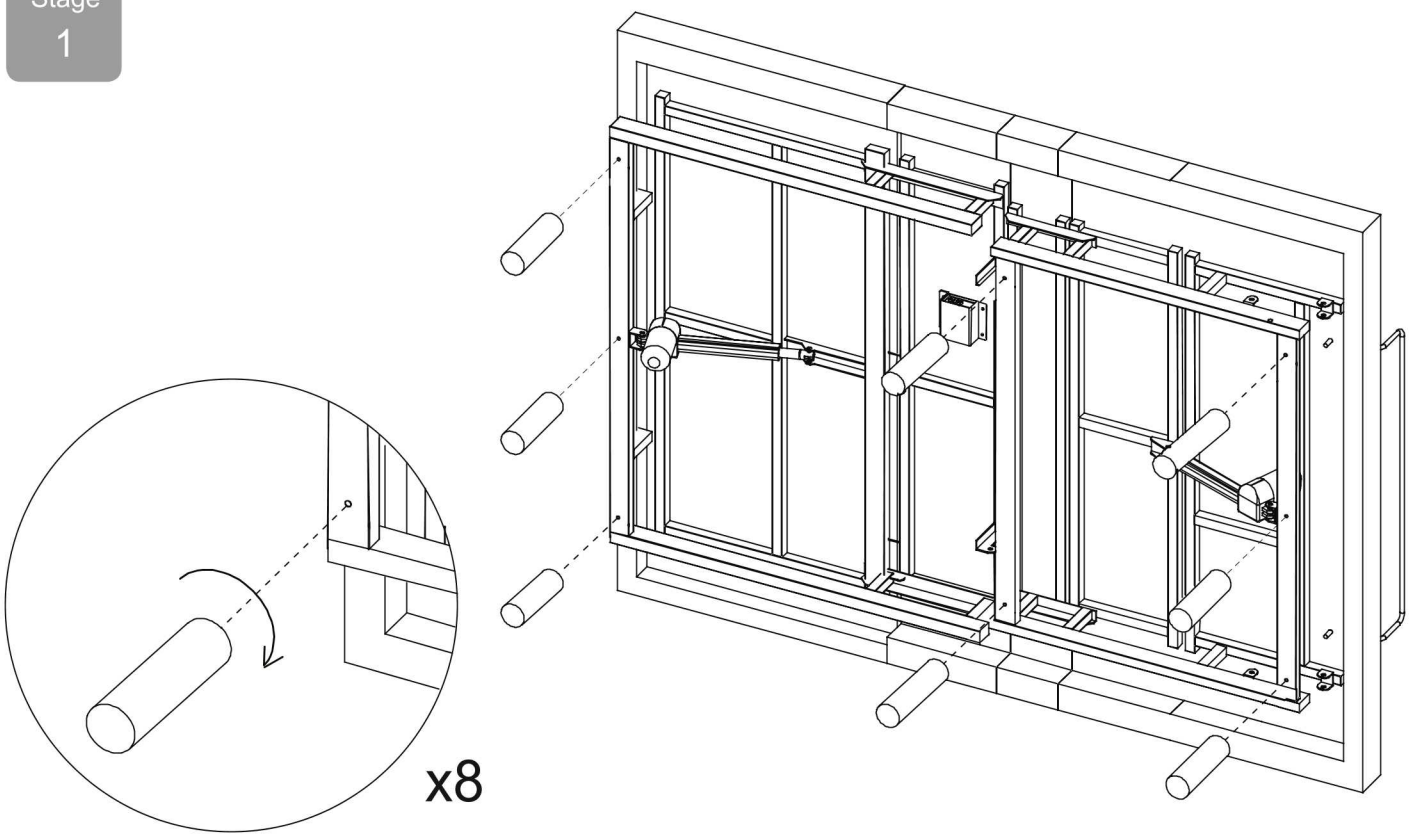

Prepare the Head & Foot Ends for assembly

Stage 2

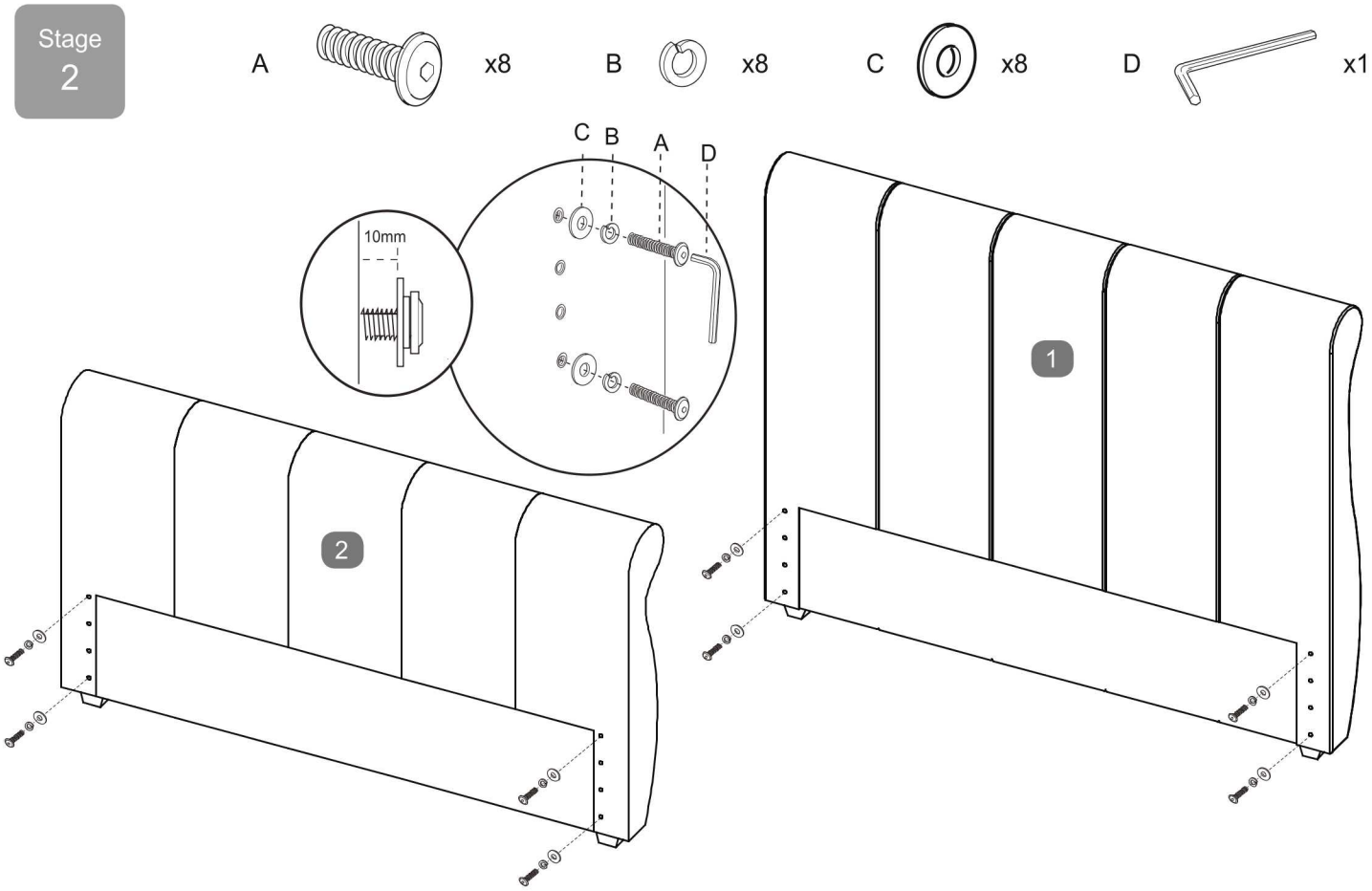

Assemble Head End and one Side Rail (3) using hardware Pack 'A'

Stage 3

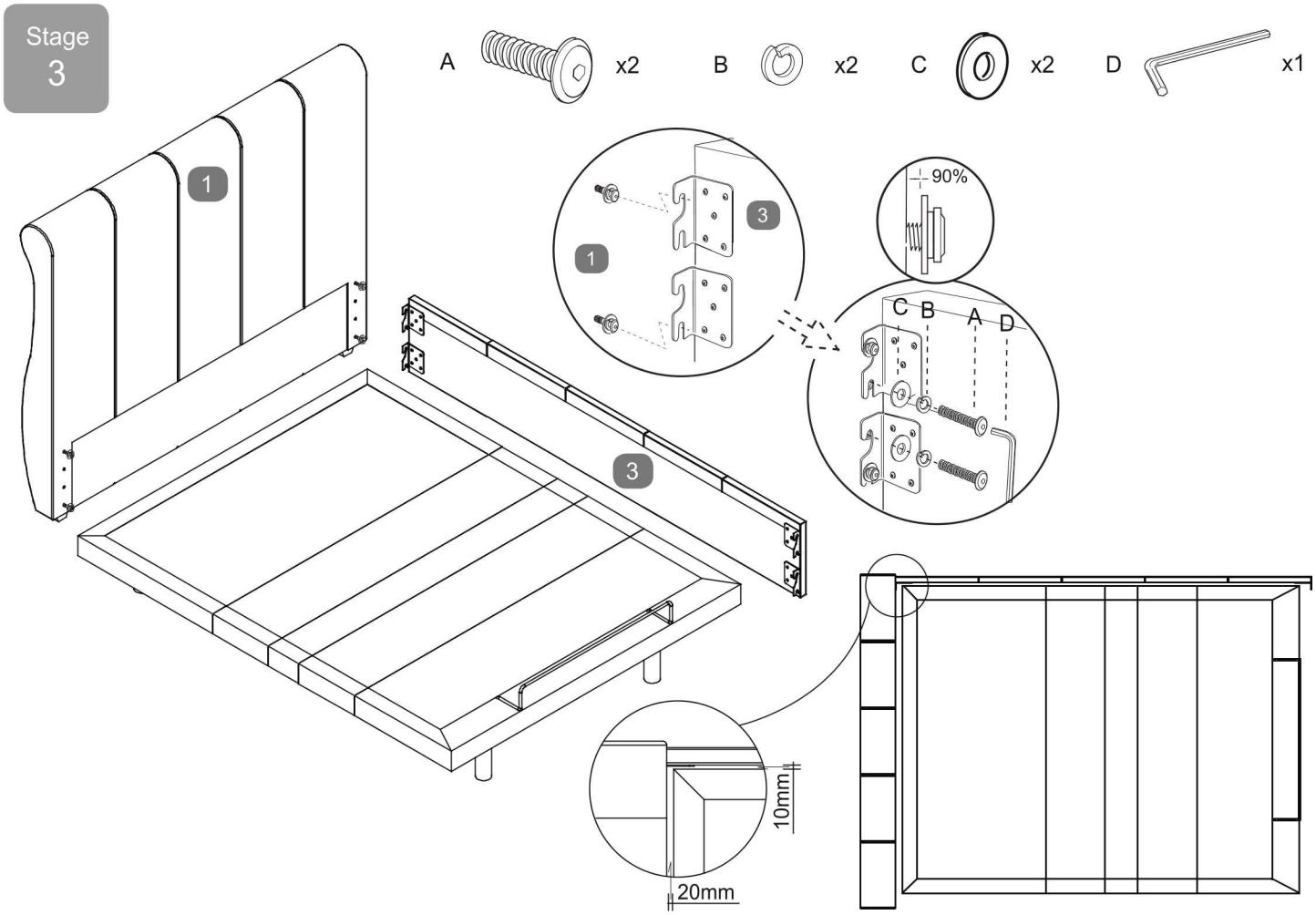

Raise the Head and Foot Ends of the Bed Base

Stage 4

Position Foot End and connect Side Rail brackets.

Stage 5

A x2 B x2 C x2 D x1

Make sure everything is working properly then fit second Side Rail (3)

Stage 6

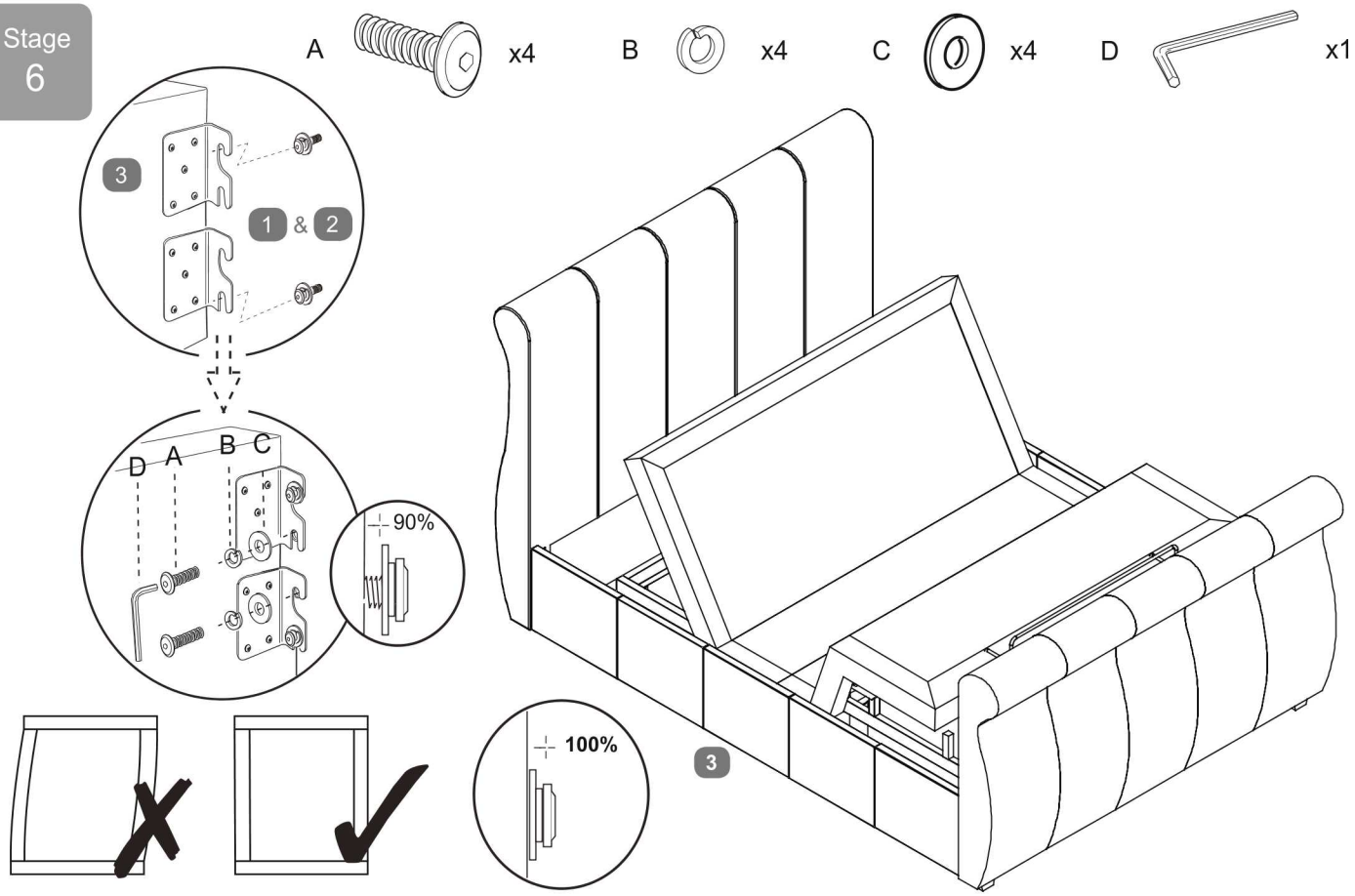

Make certain the gaps around the Bed Base are correct
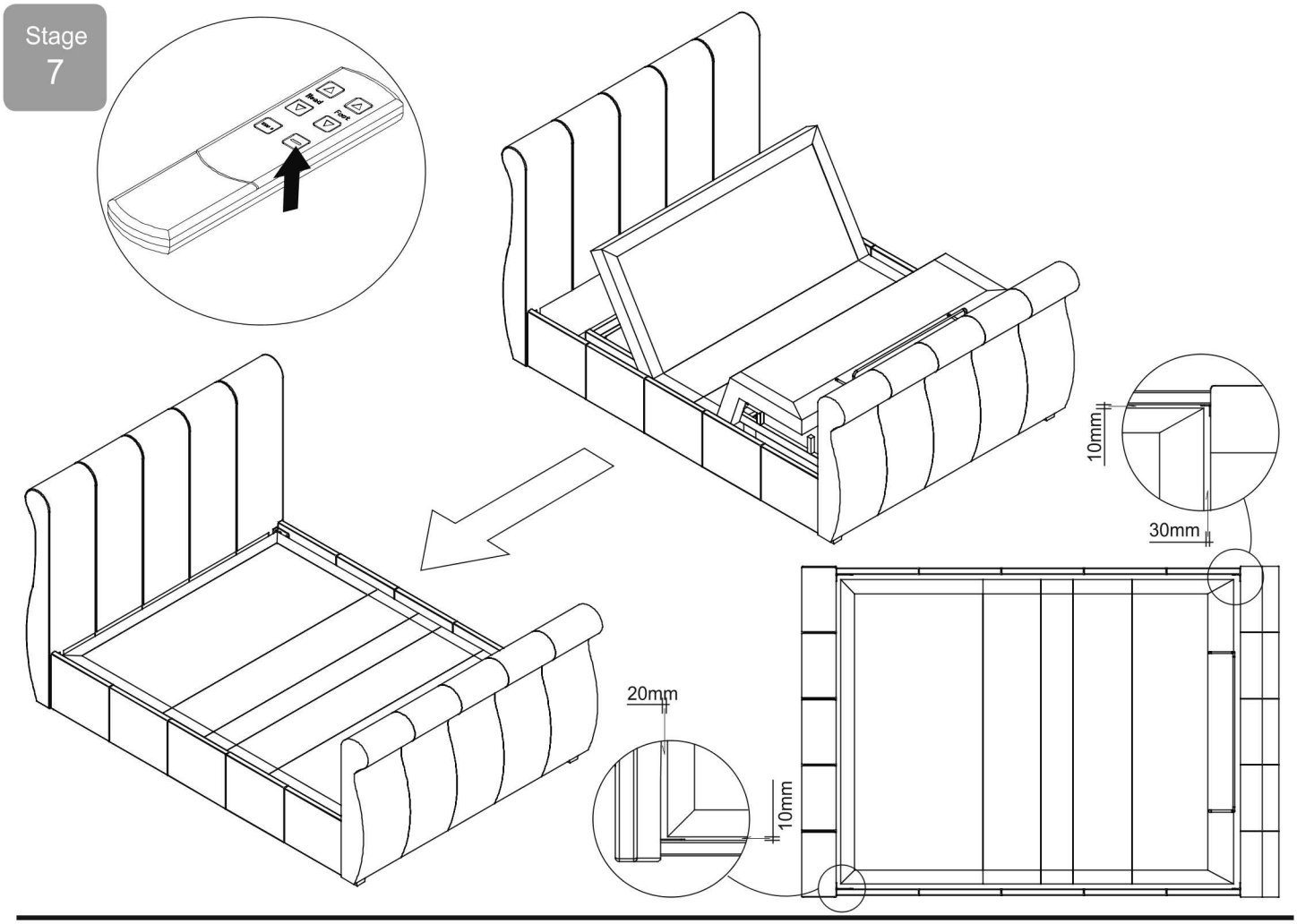
Stage 7