Billy small double/double bed

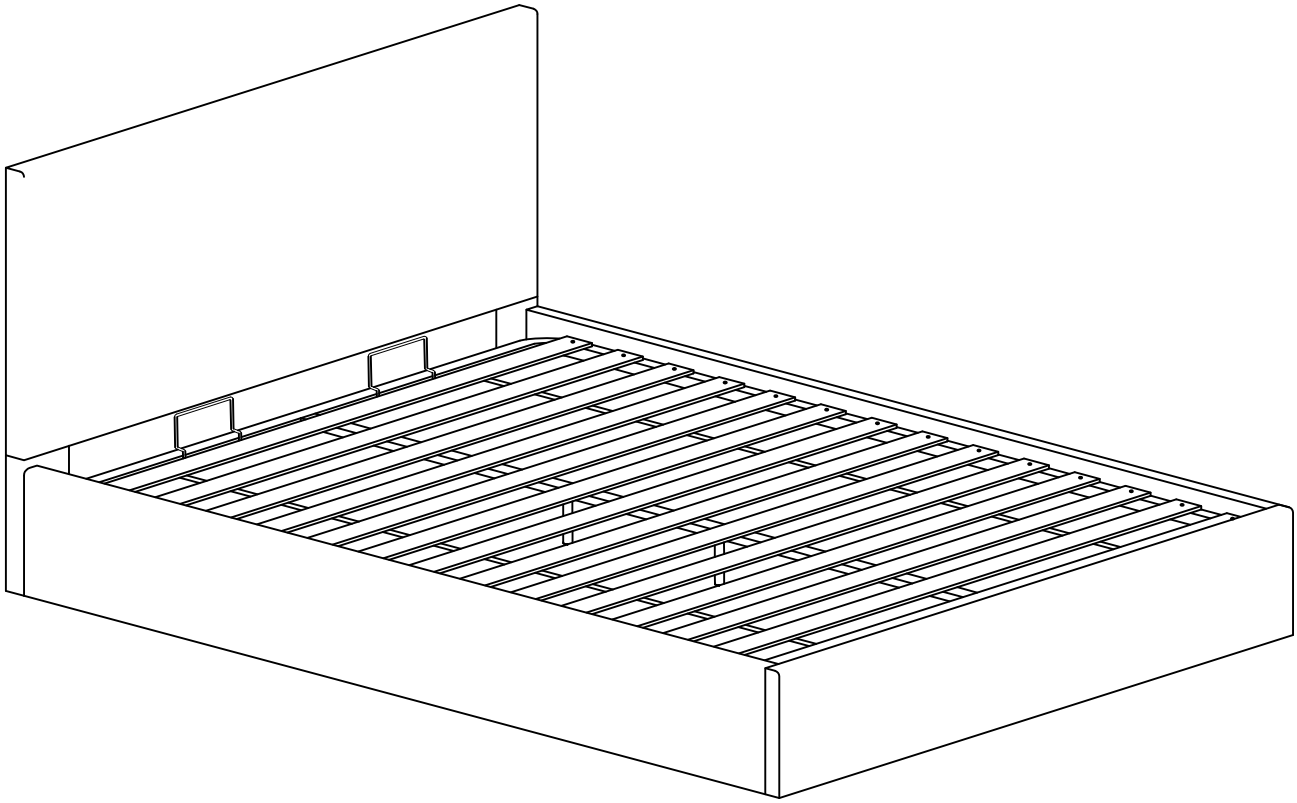

60 minutes approx assembly time

Two person assembly

Dreams

Love your bed

Thank you

Hello, thanks for choosing to purchase your bed from Dreams - you're now on your way to your best ever night's sleep. Before you begin building your bed, please take a moment to read through the instructions and make sure that you've got all the relevant parts listed on the following pages.

Assembly tips

Before you begin, it's best to identify all parts and fittings to build your **bed**. We advise laying these out on the floor to check you have everything, and familiarising yourself before building.

Top tip

We recommend that you build your new **bed** in the room you'd like it to be located - this will help prevent any risk of damage to your newly built **bed** whilst moving it.

Safety and care

It's really important to ensure children and animals are kept away from the assembly area, as there are small components used in this bed which could present a choking hazard. All plastic and wrapping materials should also be kept away from children and animals to prevent any risk of suffocation.
To keep your little ones busy, there is a colouring page inside the back cover.

Help and support

At Dreams, it's our mission to give the whole nation a great night's sleep - this means that the quality of our products is of utmost importance to us. If there are any issues with your product or any missing parts, please visit our website at www.dreams.co.uk/help

Recycling

Please ensure that packaging is disposed of in a safe and environmentally friendly way, and recycle where possible. Our assembly instructions are printed on recycled paper. Please keep your assembly instructions safe to refer back to in the future.

IMPORTANT OTTOMAN SAFETY WARNINGS

- IMPORTANT – READ CAREFULLY – RETAIN FOR FUTURE REFERENCE
- Ensure the combined bedding and mattress weight is within the recommended weight guidance.
- Adult Operation Only: Not recommed for use by under 12 years old. Please note ease of operation is dependent on height and stength of user.
- Avoid Entrapment: Always lift the bed with the mattress in place, using the handle to lift and lower the base, keeping clear of the mechanism.
- Do not exceed the maximum weight as specified in the table below:

Bed	Bed Size	Min Weight (kg)	Max Weight (kg)
Billy bed	Small Double	20	40
	Double	20	40

- Fully Open Ottoman: Ensure the ottoman is fully open before accessing the storage area.
- Avoid Hinge Area: Do not reach into the storage area through the hinge mechanism.
- Keep Children and Pets Away: Ensure children and pets stay away from the storage area. Do not stand inside the internal storage area of the bed.
- Maintenance - Regularly inspect your bed to ensure it is functioning correctly.
- Safety Strap/Handle must be positioned in the centre of the bed frame.
- Always use the saftey strap/handle to open.
- Keep hands clear of the mechanism when opening or closing the ottoman.
- No children or animals are left unattended when the frame is in the 'up' position.
- Do not overload the internal storage base.
- Before removing the mattress secure the frame to ensure it does not open unexpectedly.
- Do not attempt to lie on the mattress when the ottoman is in the raised position.
- When lifting the ottoman remove all bedding except the fitted sheet.
- Depending on the weight of the mattress, the rising speed will vary so be careful until you get used to the speed.
- NOTE: When fully assembled and the mattress is in position, please raise and lower the ottoman 4 / 5 times to ensure the gas pistons are fully lubricated.

Parts

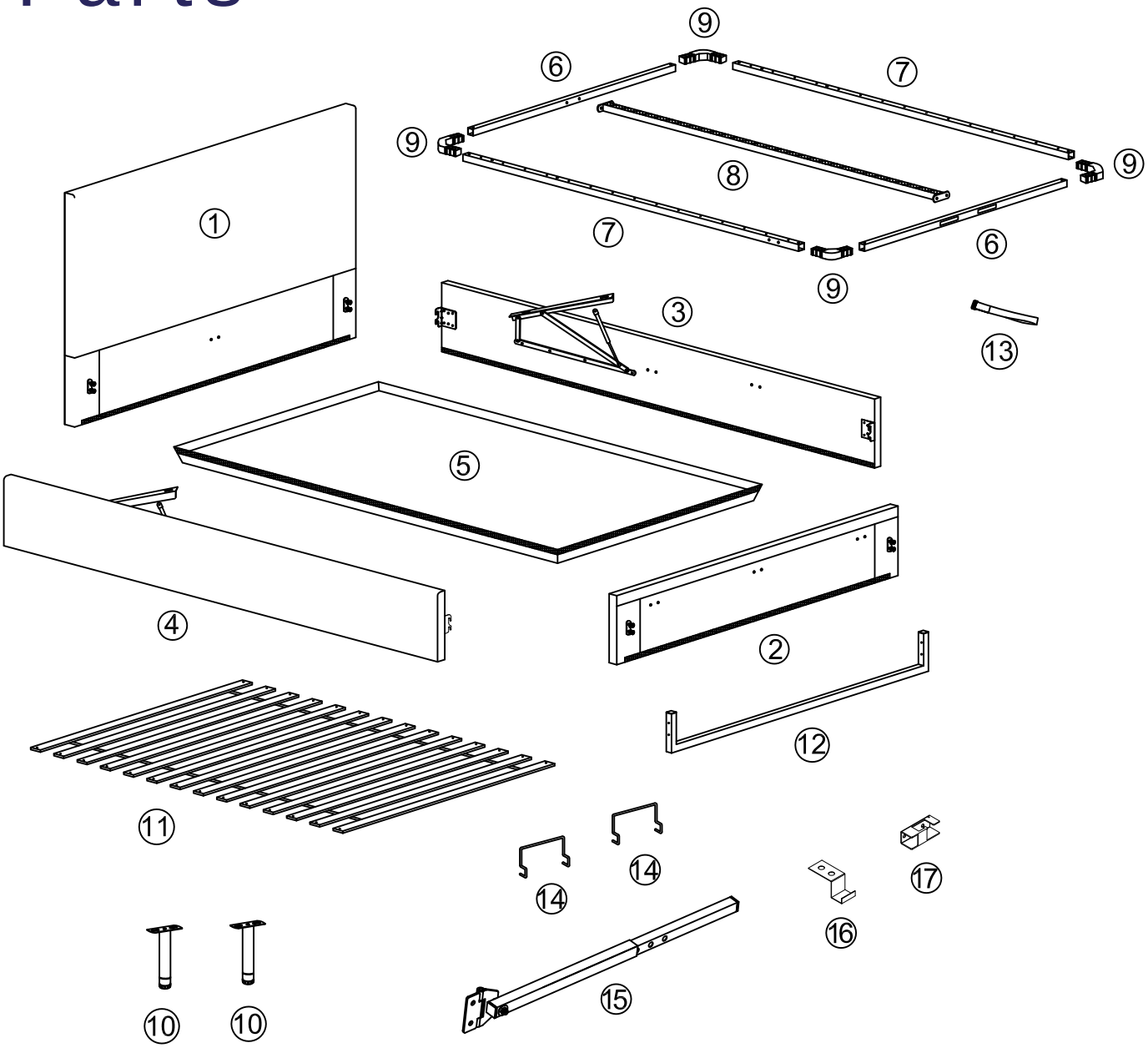

Parts list

Code	Description	Qty	Box
1.	Headboard	1	1
2.	Footboard	1	2
3.	Right Side Rail	1	2
4.	Left Side Rail	1	2
5.	Baseboard	1	2
6.	Short Tube Slat Frame	2	3
7.	Long Tube Slat Frame	2	3
8.	Centre Rail of Slat Frame	1	3
9.	Connector for Slat Frame	4	2

Code	Description	Qty	Box
10.	Metal Support Legs	2	2
11.	Slats	1	3
12.	Centre Supporter	1	2
13.	Handle	1	2
14.	Mattress holder	2	2
15.	Ottoman support bar	1	2
16.	Hanger	1	2
17.	Brackets	1	2

Fittings

Please check you have all the parts listed below with your product:

PACK A(in box 2)

A x 1 pc Allen Key (for M8 bolt)	B x 20 pcs Bolts (M8 x 25mm)	C x 32pcs Washers (M8 x 19mm)	D x 24pcs Spring Washers (M8)
E x 8 pcs Bolts (M8 x 45mm)	F x 8 pcs Bolts (M6 x 10mm)	G x 1 pc Allen Key (for M6 bolt)	H x 1 pc Spanner (for M8 nut)
I x 4 pcs Nuts (M8)	J x 28 pcs Bolts (M6 x 20mm)	N x 6 pcs Brackets	

PACK B(in box 2) Hardware for ottoman support bar

I x2 pcs Nuts (M8)	K x2 pcs Bolts (M8 x 40mm)	L x 1pc M8 Bolt	M x 4 pcs Bolts (M8 x 20mm)	16. Hanger x 1	17. Brackets x 1

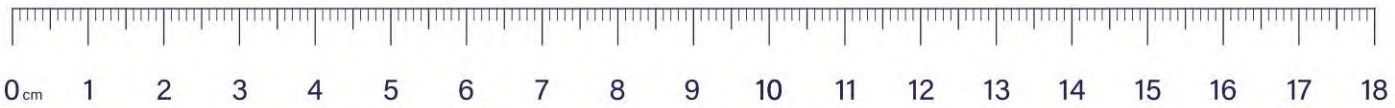

Tools required

Please check you have all these below

Tape measure

Cross head screwdriver

Step 1

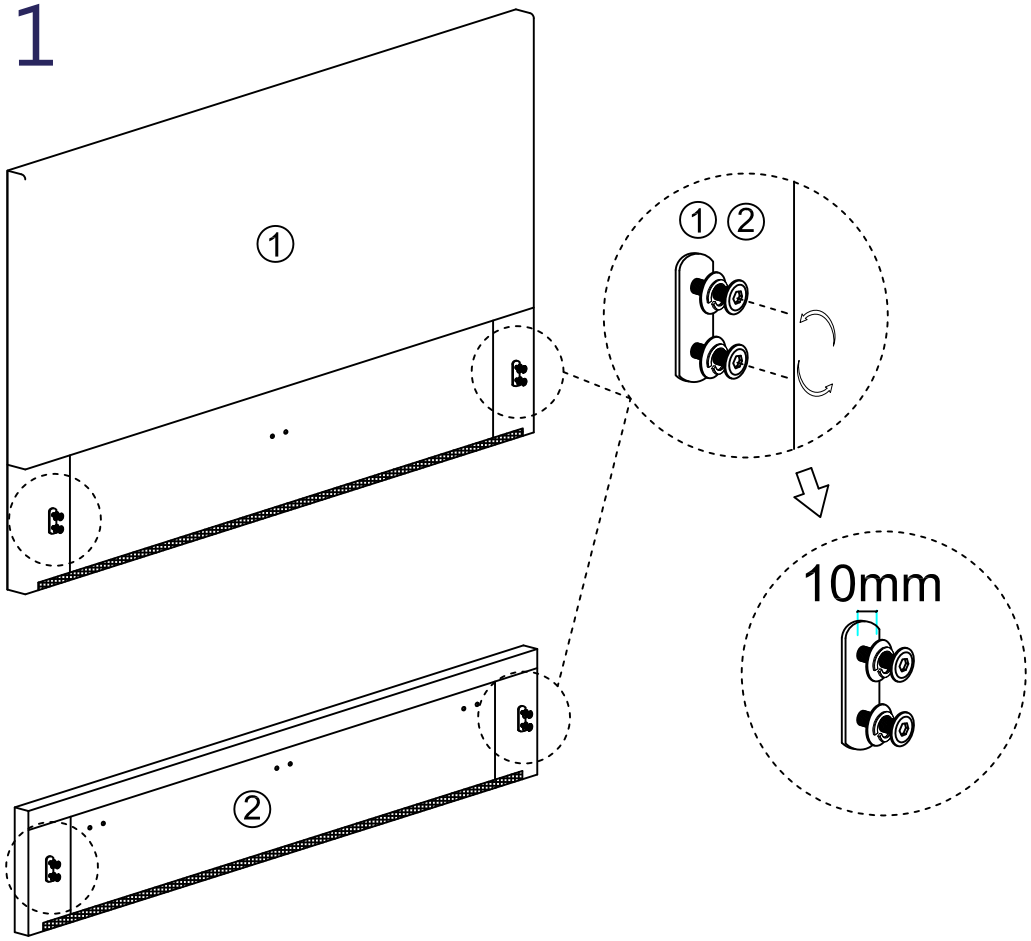

Untie all bolts from Headboard/ Footboard (1 and 2) and keep 10 mm distance as in the diagram.

Step 2

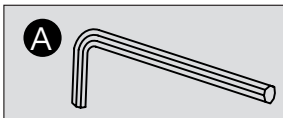

Allen Key x 1 (for M8 bolt)

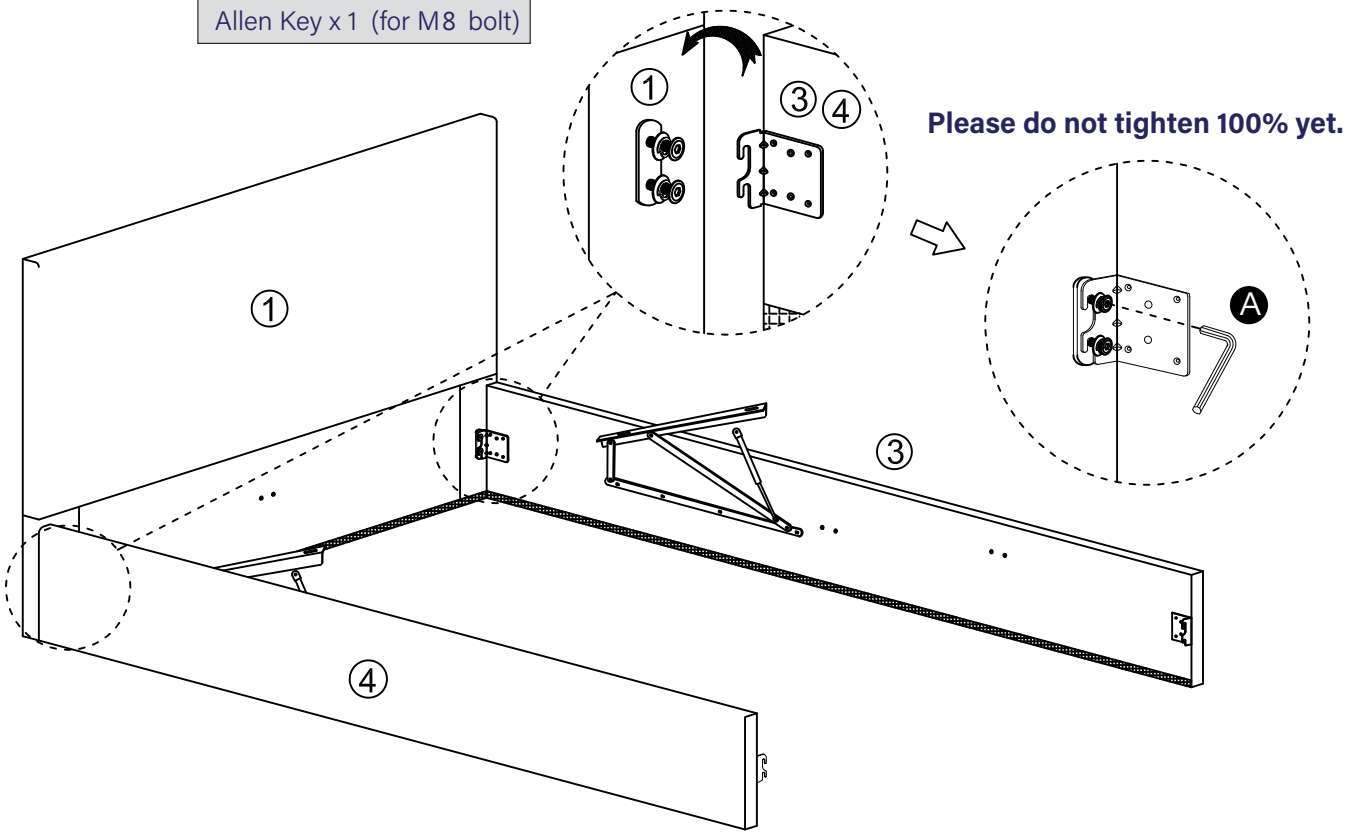

Attach side rails (3 and 4) to headboard (1) by allen key (A) as shown.

Step 3

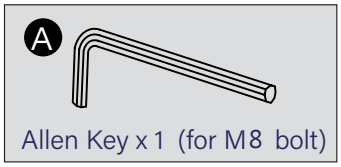

Allen Key x 1 (for M8 bolt)

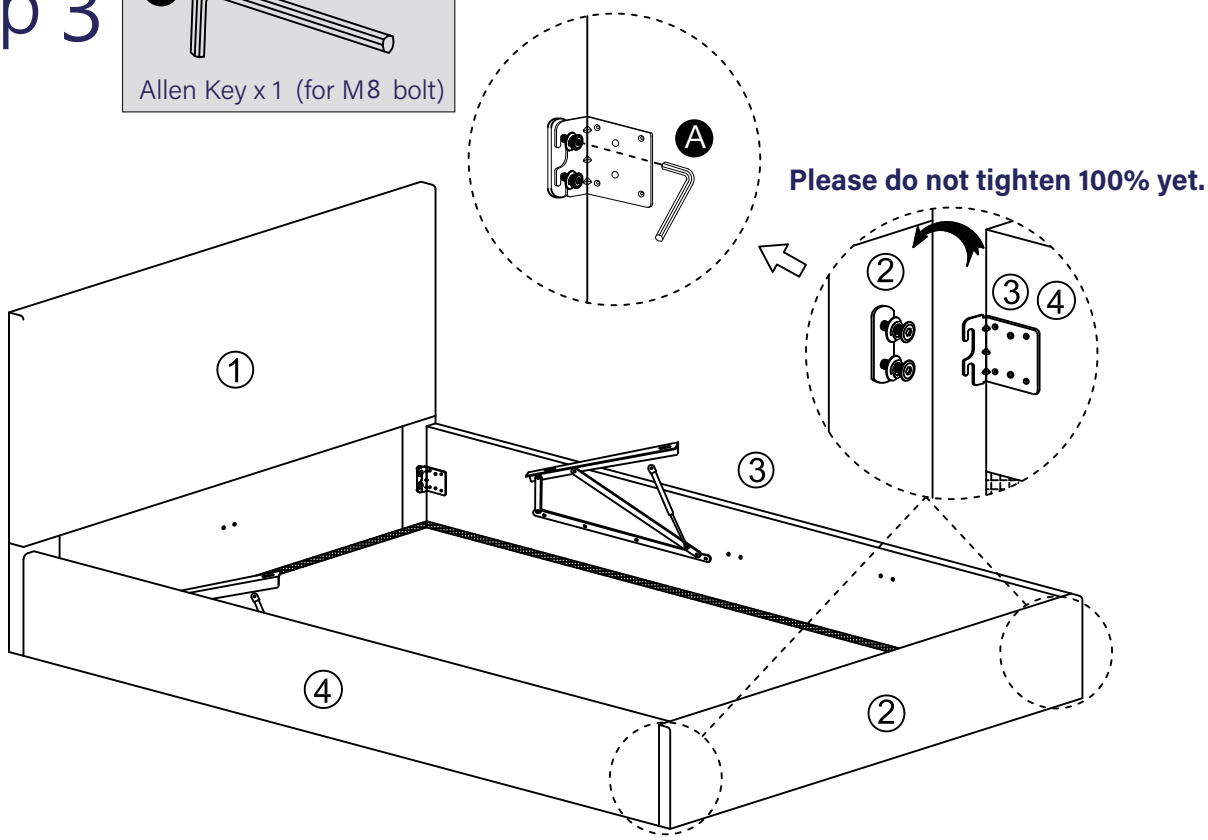

Attach side rails (3 and 4) to footboard (2) by allen key (A) as shown.

Step 4

Allen Key x 1 (for M8 bolt)

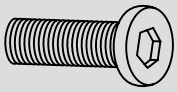

Bolts x 12 (M8 x25mm)

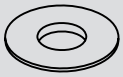

Washers x 12 (M8 x 19mm)

Spring Washers x 12 (M8)

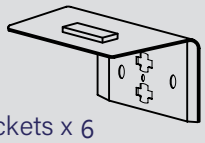

Brackets x 6

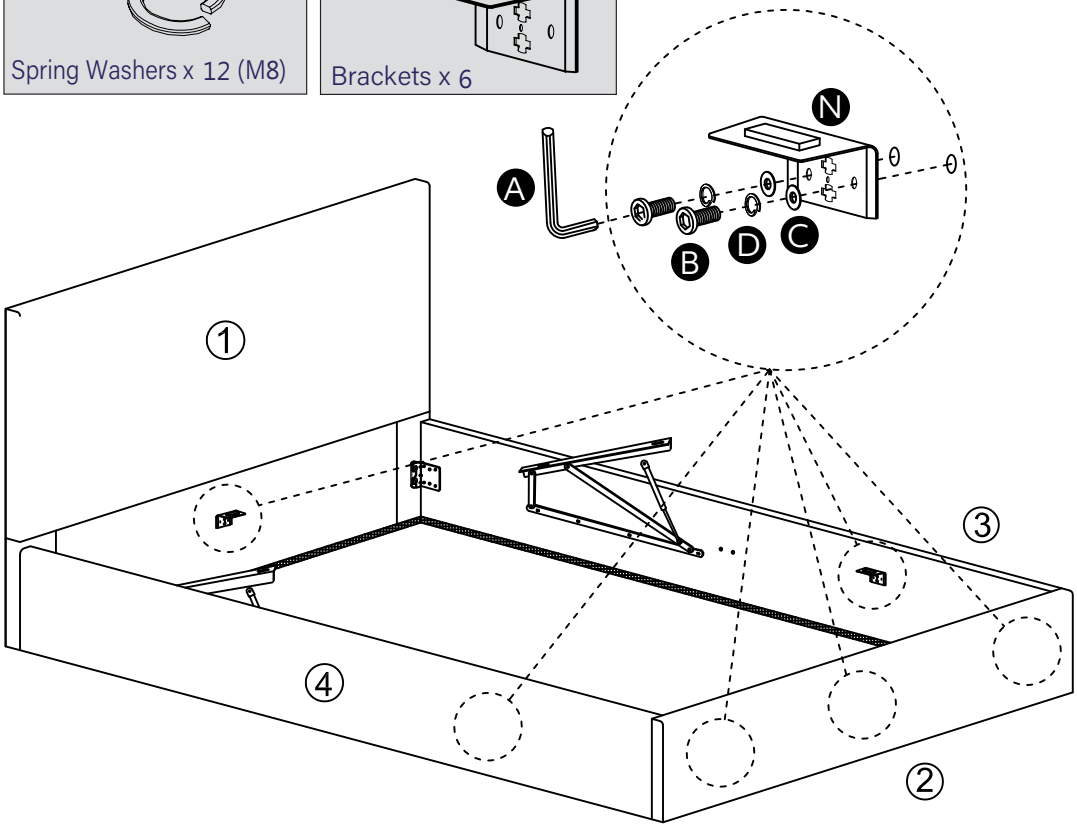

Attach 6 x brackets (N) to the headboard (1), side rails (3 and 4) and footboard (2) with 12 x bolts 25 mm (B) and 12 x washers (C), 12 x spring washers (D) by using allen key (A).

Step 5

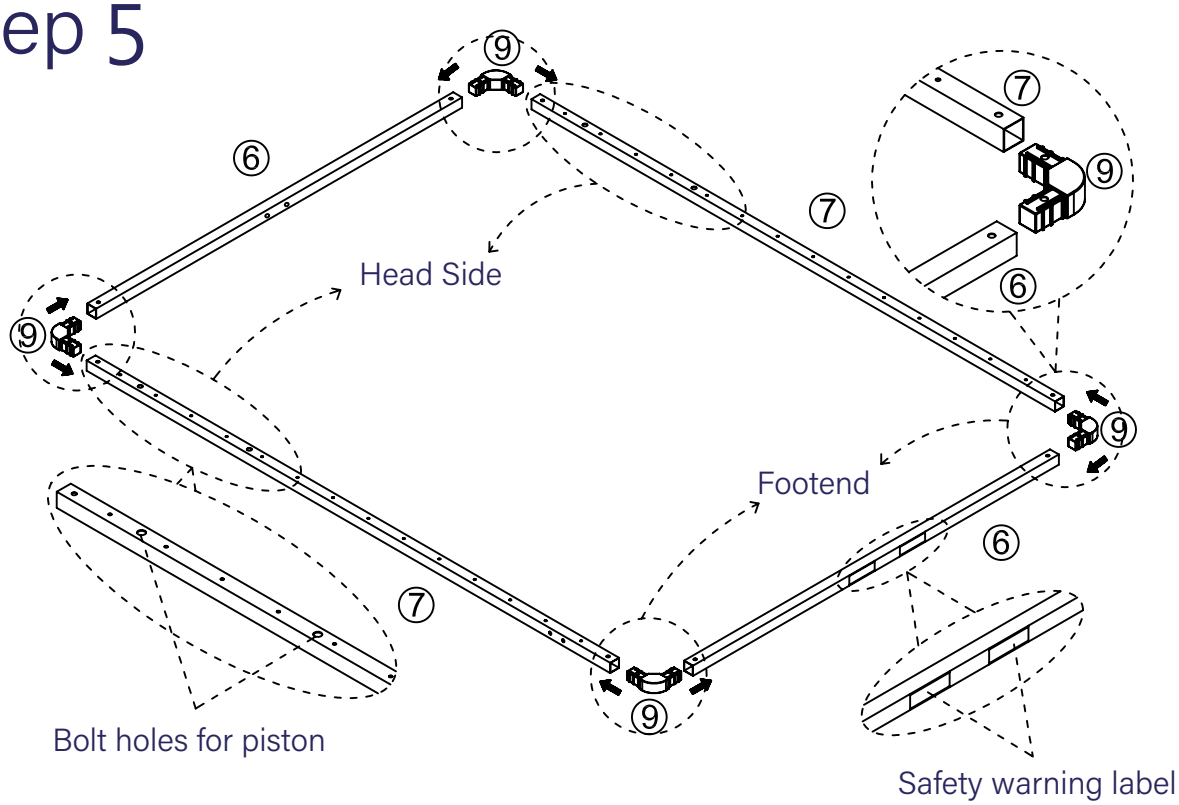

Note: The Short Tube Slat Frame (6) with safety warning label should be assembled footend.

Step 6

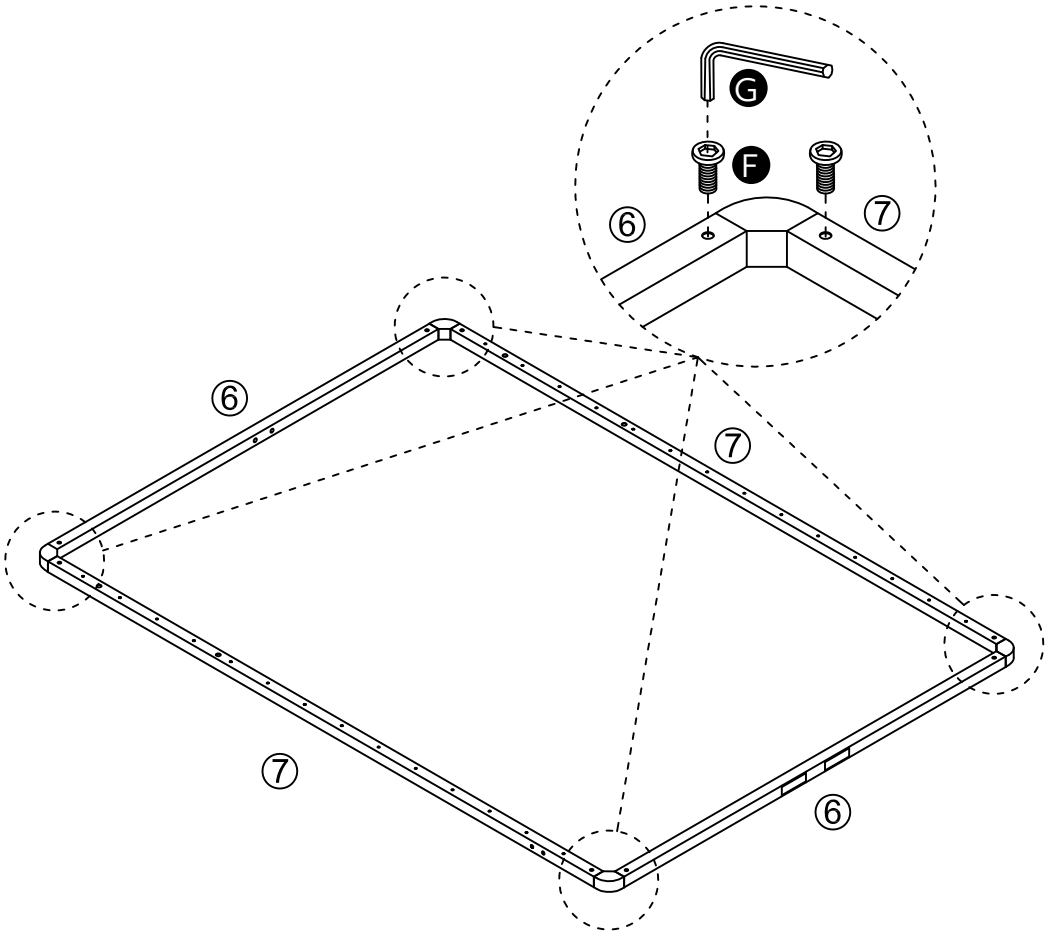

Step 7

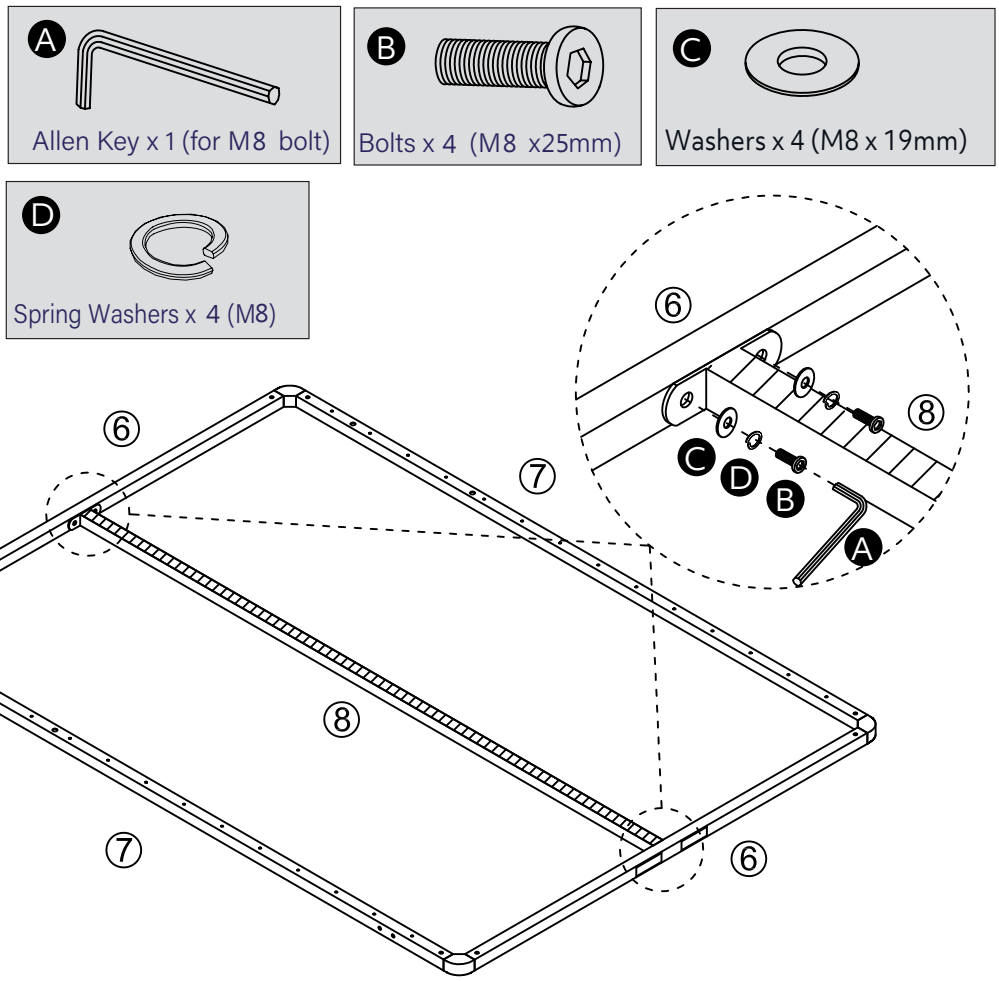
A
Allen Key x 1 (for M8 bolt)
B
Bolts x 4 (M8 x25mm)
C
Washers x 4 (M8 x 19mm)
D
Spring Washers x 4 (M8)
6
7
8
A
B
C
D

Step 8

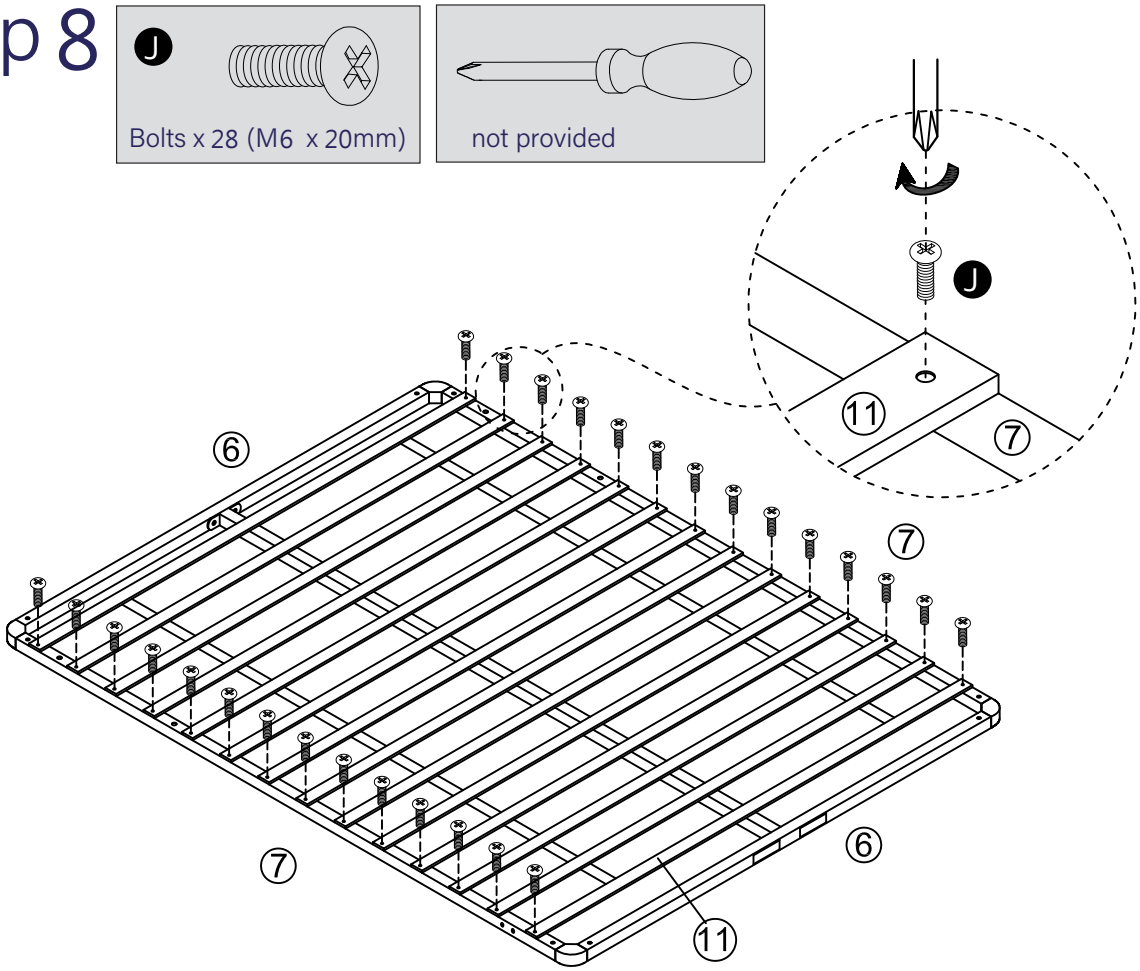
J
Bolts x 28 (M6 x 20mm)
not provided
6
7
11
J

Step 9

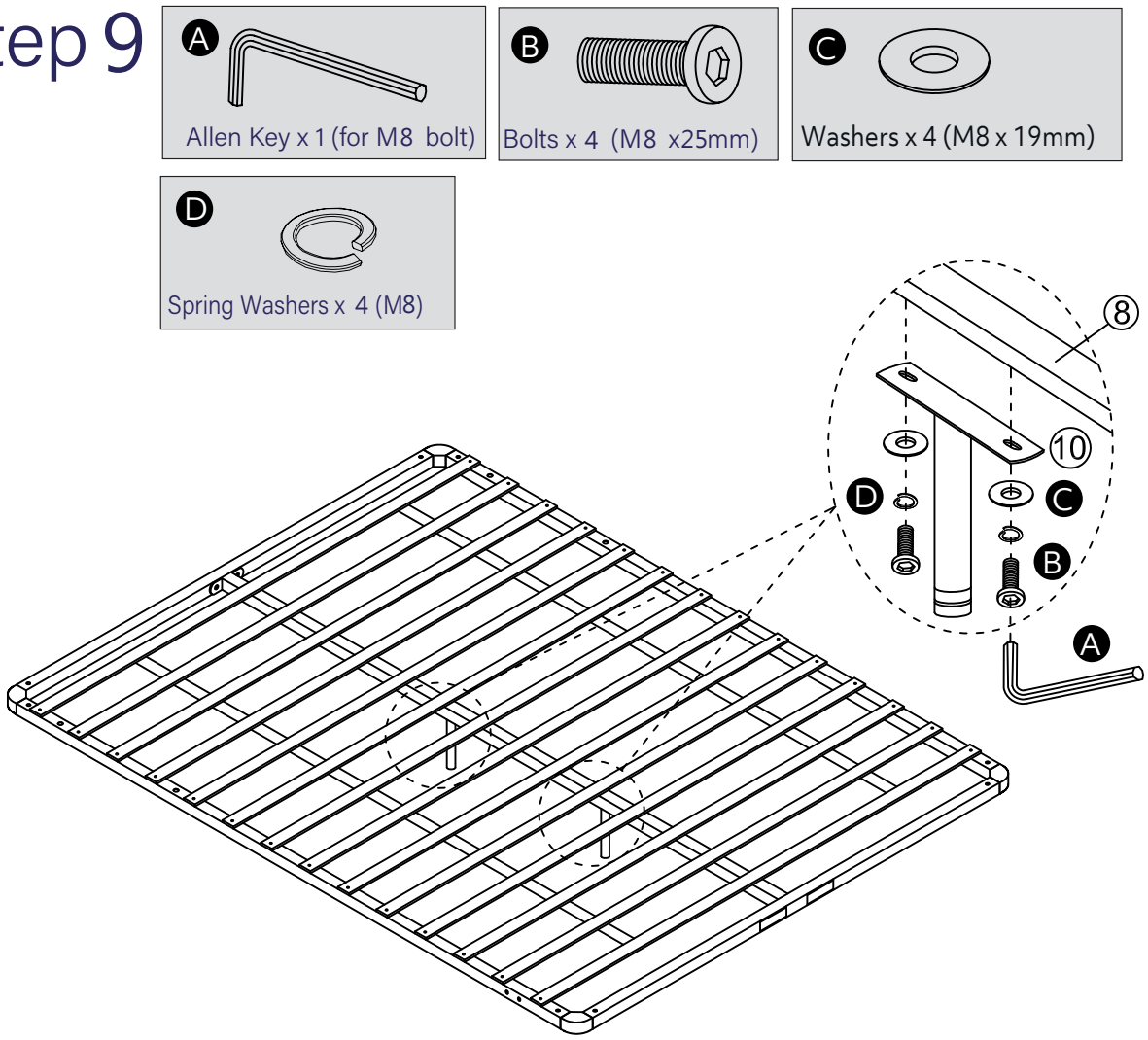
A
Allen Key x 1 (for M8 bolt)
B
Bolts x 4 (M8 x25mm)
C
Washers x 4 (M8 x 19mm)
D
Spring Washers x 4 (M8)
8
10
D
C
B
A

Step 10

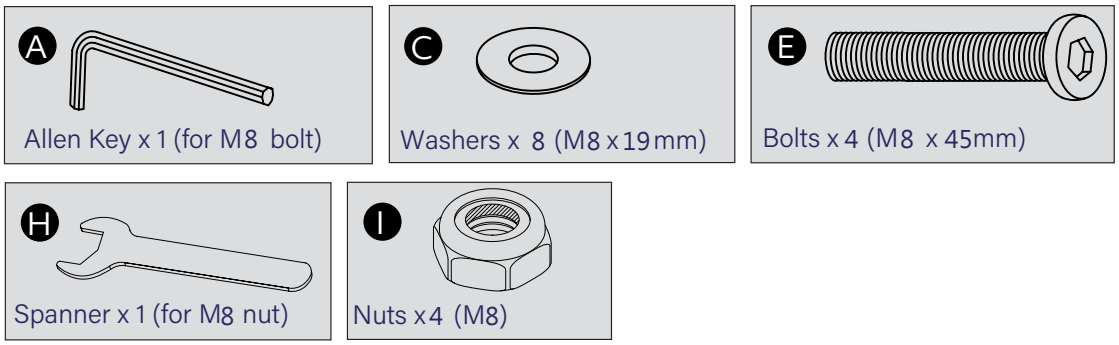

Fix the nut (I) at one end of bolt (E) by using spanner (H), then tighten the bolt (E) by using allen key (A).

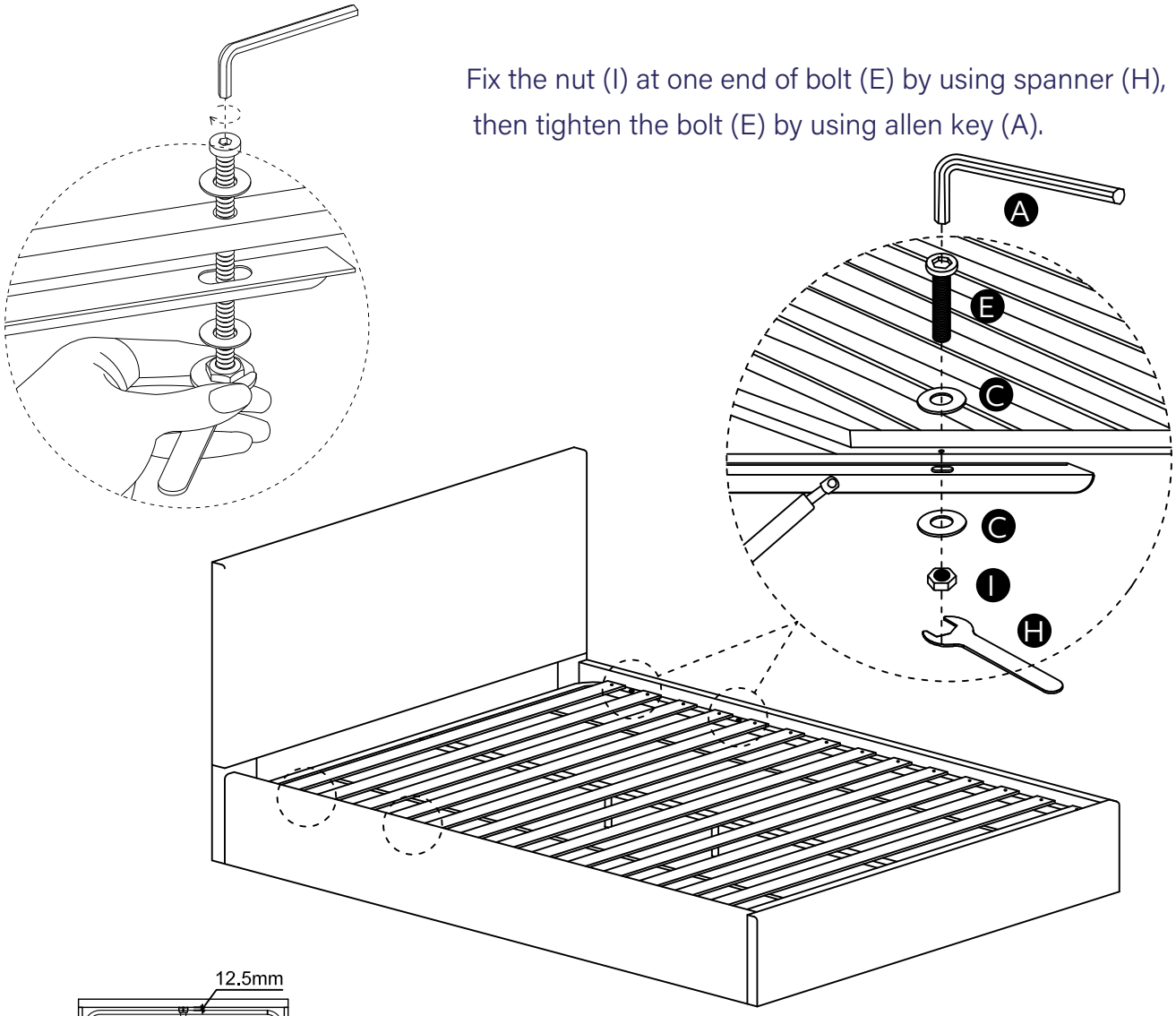

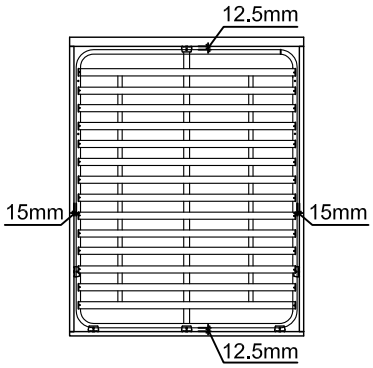

We suggest to assemble the slat frame in the middle position of the bed and try to keep 15mm distance on both side rails and keep 12.5 mm distance on headboard and footboard need to be equal distance.

With help from your assistant, lift slat frame onto slat frame support bars aliging first set of holes on the support bars (nearest to headbaord). Using 4 x bolts 45mm (E), 8 x wahsers (C) and 4 x nuts (I) by allen key (A) and spanner (H).
Ensure slat frame is central with even gaps all around before fully tightening all bolts.

Step 11

Un- tie each mechanism, take out the transit protection block
Tilt the arms upwards slat frame support bar.
Tighten all nuts and washers on the arms.

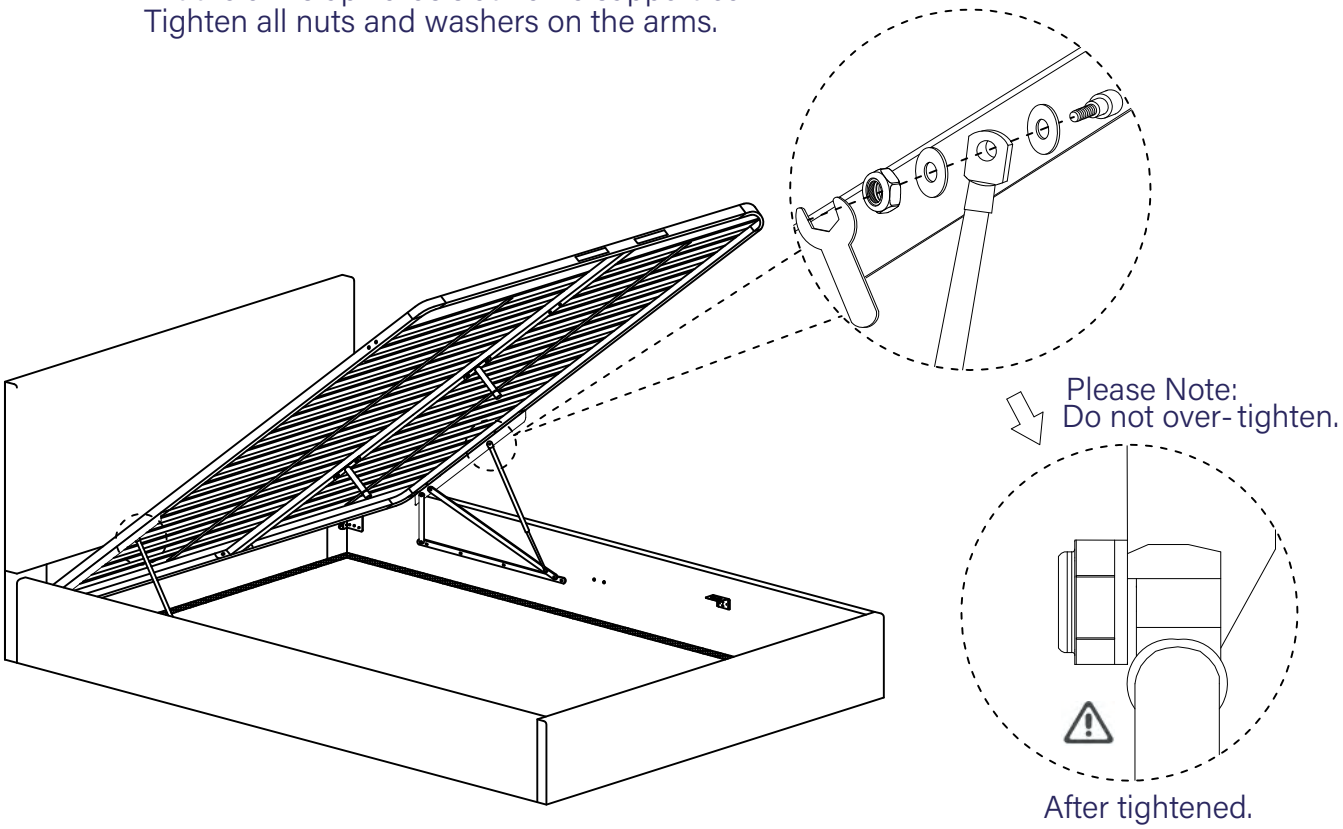

Step 12

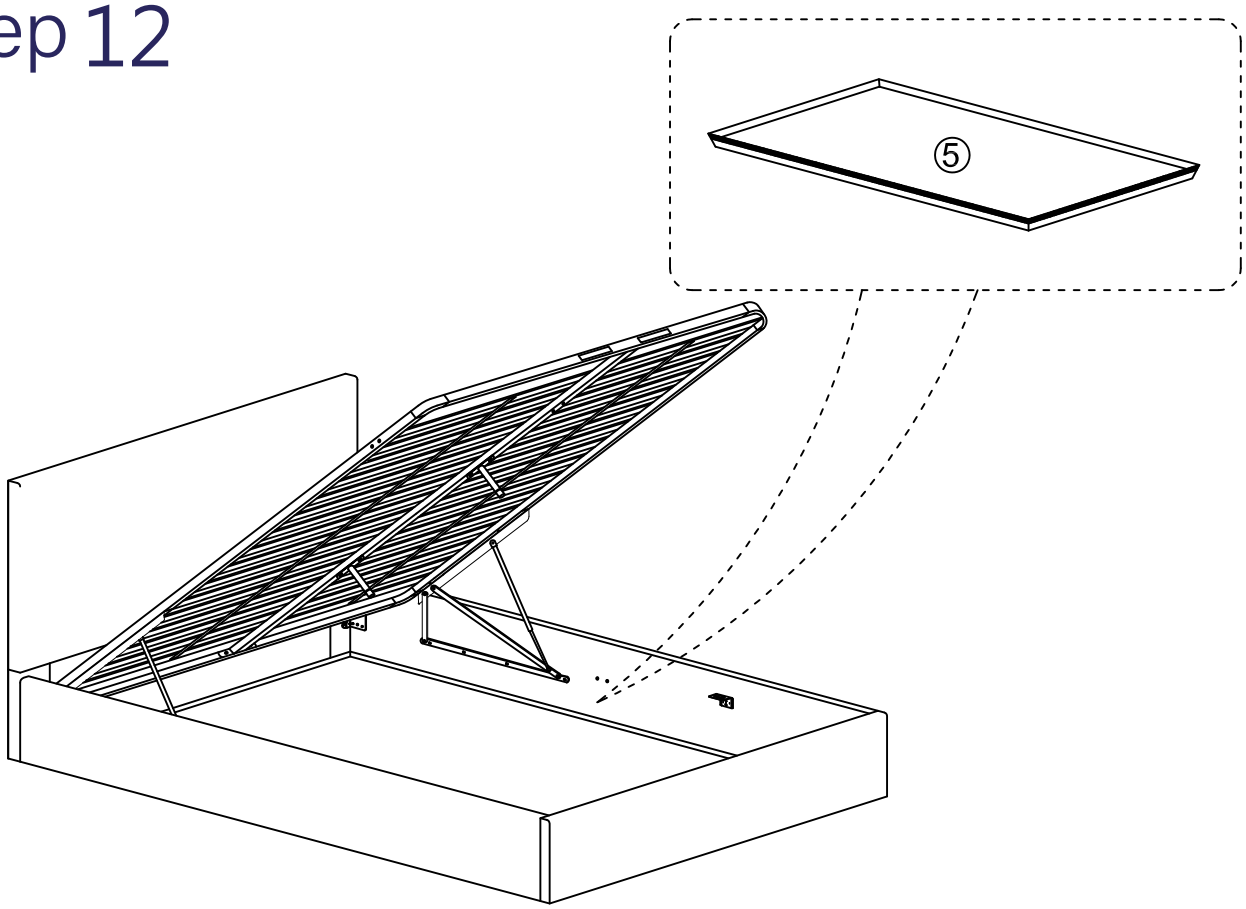

Put the baseboard (5) inside of bed. Attach the velcro to the four edges of frame.

Step 13

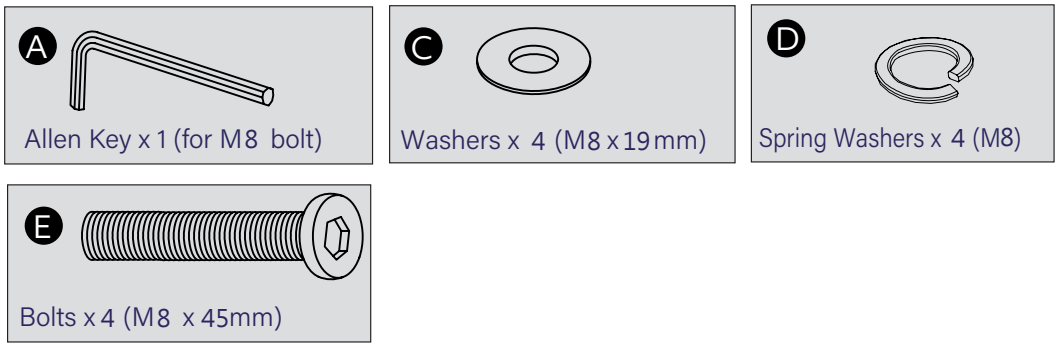

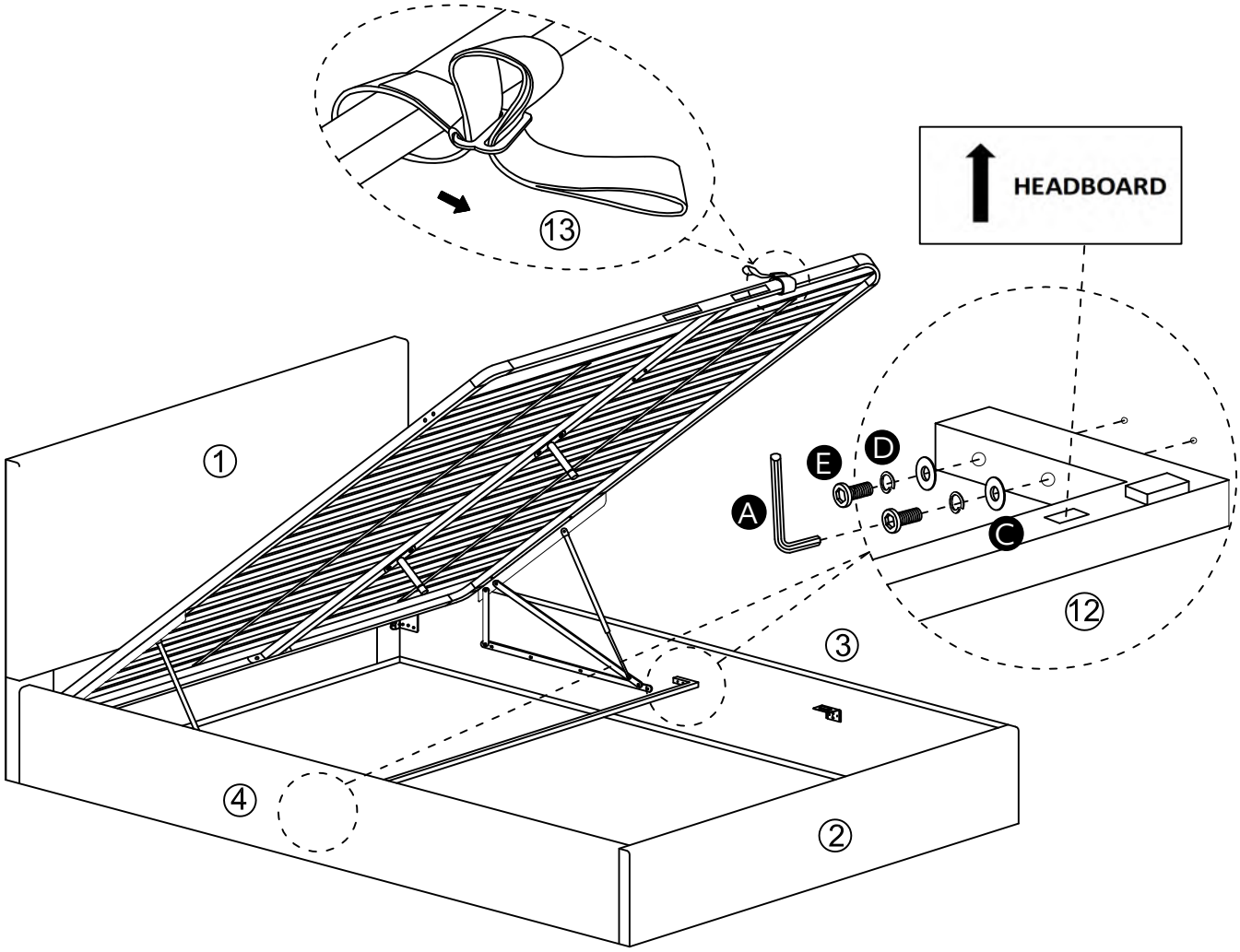

Tighten the center supporter(12) to the side rails (3 and 4) with 4 x bolts 45 mm (E) and 4 x washers (C), 4 x spring washers (D) by using allen key (A).
Attach the Handle (13) to lift the gas lift frame at the footend of the frame as attached photo.
Use the handle to open & close the gas lift frame.

Step 14

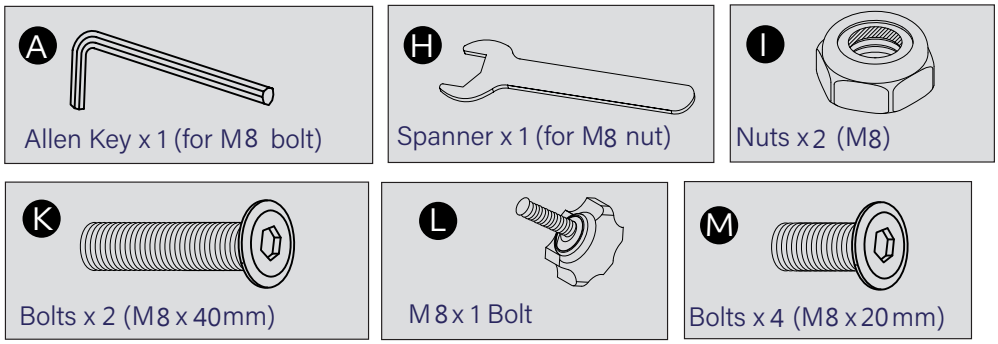

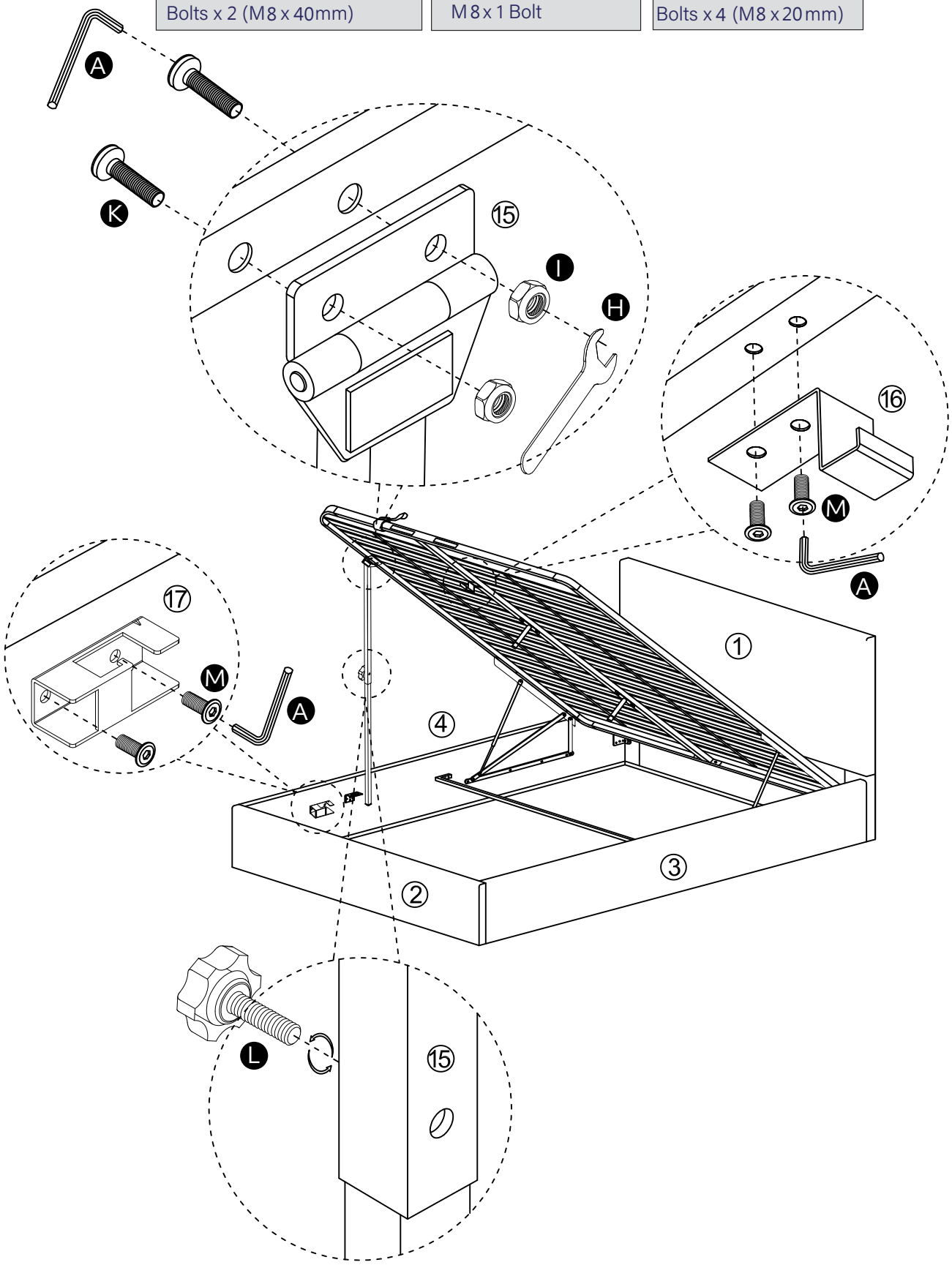

The bracket (17) must be assembled on the left side rail (4).

Step 15

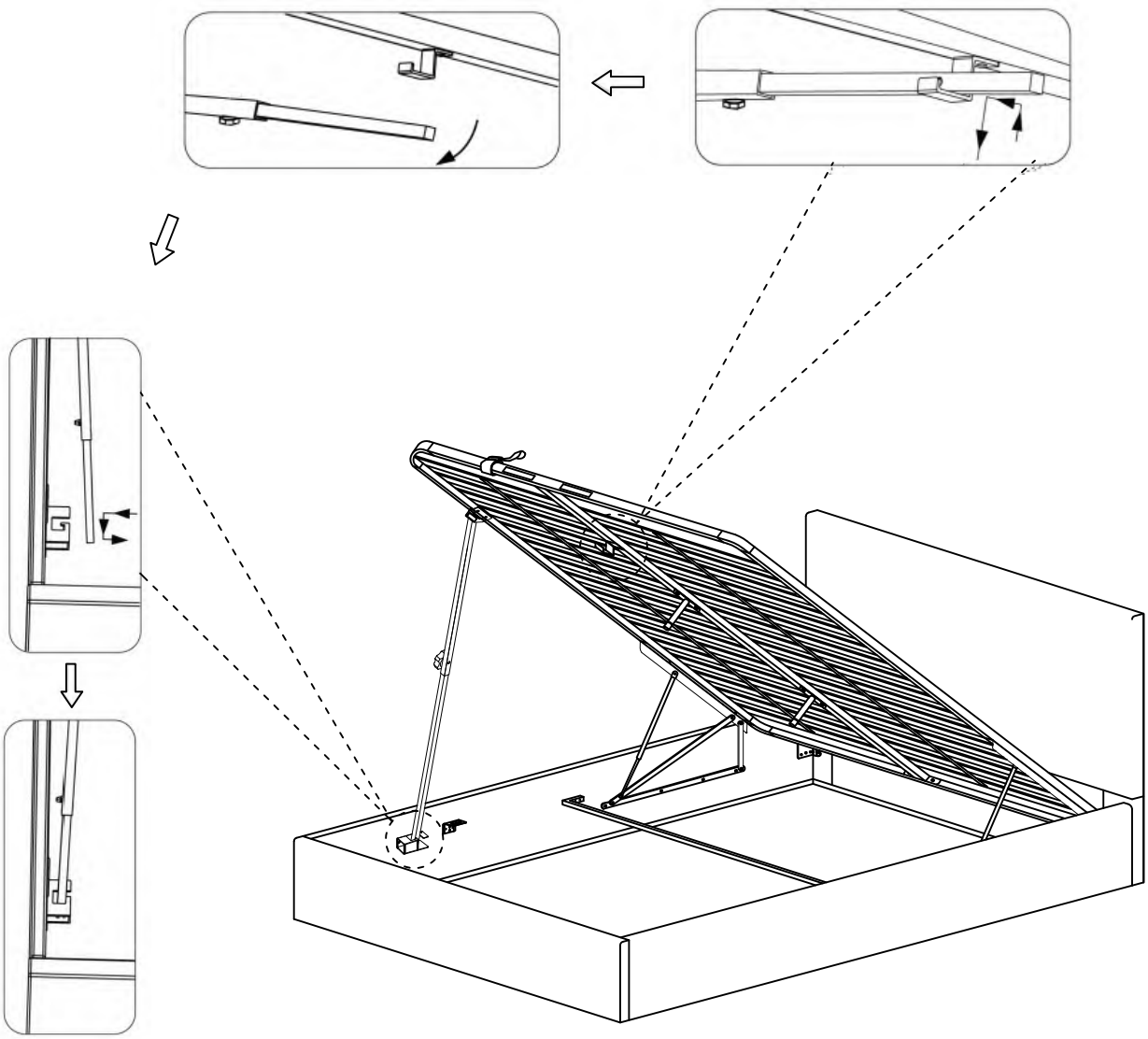

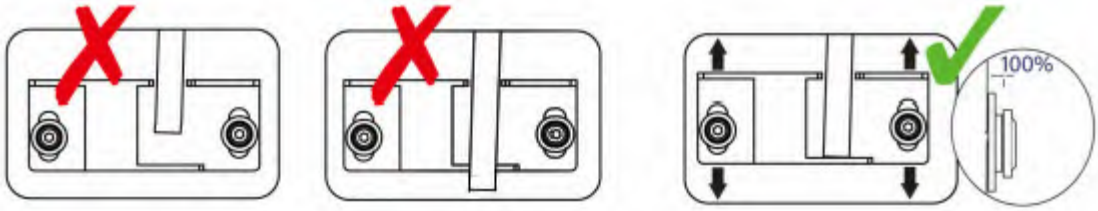

Step 16

Put mattress holders (14) on the slat frame shown in the diagram.

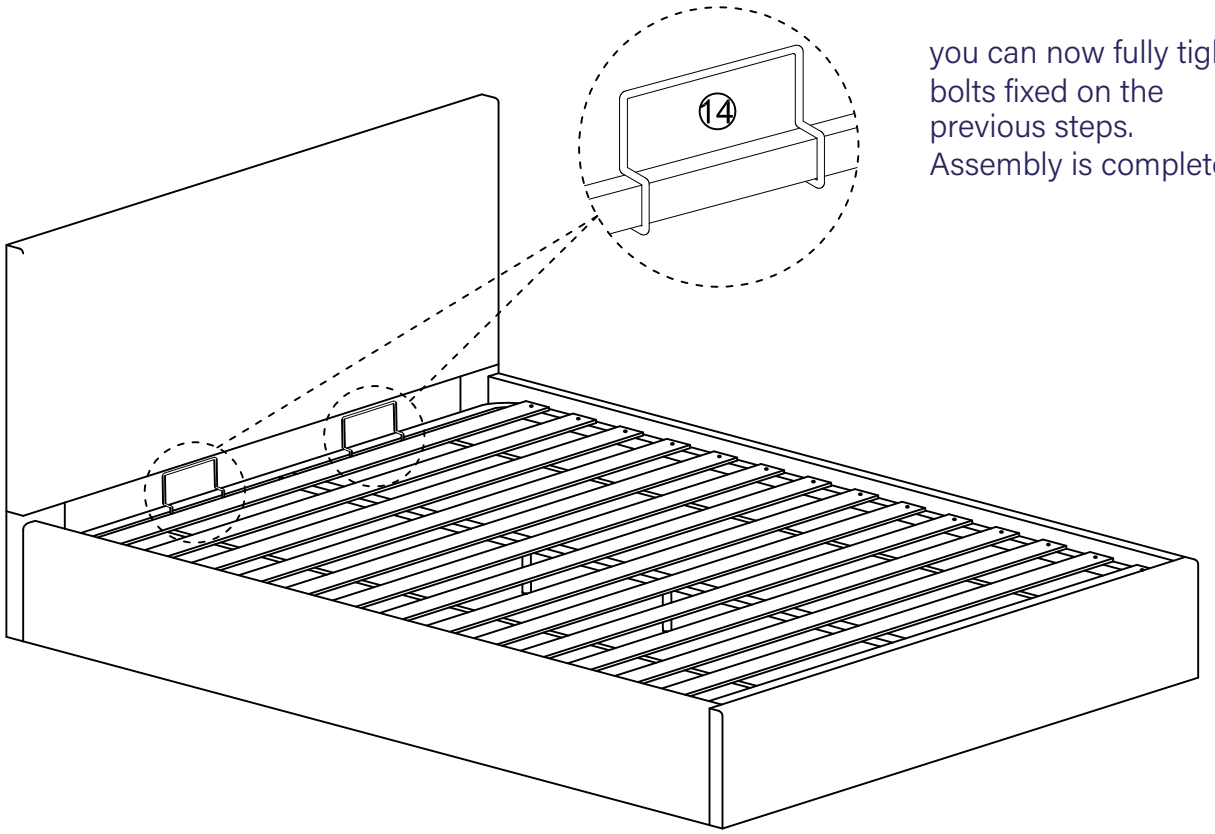

you can now fully tighten all bolts fixed on the previous steps.
Assembly is complete.

Depending on the weight of the mattress, the rising speed will vary so be careful until you get used to the speed.

Always use the strap to lift or lower the frame - keep fingers well away from the moving parts.

NOTE:When fully assembled and the mattress is in position, please raise and lower the ottoman 4 / 5 times to ensure the gas pistons are fully lubricated.

IMPORTANT OTTOMAN SAFETY WARNINGS

- IMPORTANT – READ CAREFULLY – RETAIN FOR FUTURE REFERENCE
- Ensure the combined bedding and mattress weight is within the recommended weight guidance.
- Adult Operation Only: Not recommed for use by under 12 years old. Please note ease of operation is dependent on height and stength of user.
- Avoid Entrapment: Always lift the bed with the mattress in place, using the handle to lift and lower the base, keeping clear of the mechanism.
- Do not exceed the maximum weight as specified in the table below:

Bed	Bed Size	Min Weight (kg)	Max Weight (kg)
Billy bed	Small Double	20	40
	Double	20	40

- Fully Open Ottoman: Ensure the ottoman is fully open before accessing the storage area.
- Avoid Hinge Area: Do not reach into the storage area through the hinge mechanism.
- Keep Children and Pets Away: Ensure children and pets stay away from the storage area. Do not stand inside the internal storage area of the bed.
- Maintenance - Regularly inspect your bed to ensure it is functioning correctly.
- Safety Strap/Handle must be positioned in the centre of the bed frame.
- Always use the saftey strap/handle to open.
- Keep hands clear of the mechanism when opening or closing the ottoman.
- No children or animals are left unattended when the frame is in the 'up' position.
- Do not overload the internal storage base.
- Before removing the mattress secure the frame to ensure it does not open unexpectedly.
- Do not attempt to lie on the mattress when the ottoman is in the raised position.
- When lifting the ottoman remove all bedding except the fitted sheet.
- Depending on the weight of the mattress, the rising speed will vary so be careful until you get used to the speed.
- NOTE: When fully assembled and the mattress is in position, please raise and lower the ottoman 4 / 5 times to ensure the gas pistons are fully lubricated.

Care and maintenance

Here are some tips to keep your new furniture in tip-top condition

Cleaning

To clean your new furniture, we'd advise using a warm damp cloth or if fabric, remove dust using a low suction vacuum cleaner - please do not use abrasive chemicals or bleach as this may damage the product.

Checking and moving

Periodically we recommend you check that the screws or fixtures haven't been become loose, over time. To move your new furniture, we recommend lifting it where possible, as dragging or pushing it could cause damage to the legs or flooring.

Wood

Please note each of our wooden pieces are unique, meaning that markings and shade can vary slightly between beds. Over a period of time, the wood might lighten or fade slightly due to light exposure.

Fabric

Please note depending on the lighting, positioning and surroundings of your room, the shade of the colour can sometimes appear slightly different. Over a period of time, the colour might lighten or fade slightly due to light exposure.

Metal

Metal tends to be more resilient to everyday wear and tear. We recommend to gently dust your metal furniture and keep it dry to maintain its look.

Thank you for shopping with us - we hope you have a great night's sleep

Sleep well

Little dreamers

Keep the little ones entertained while you assemble your new purchase.

Dreams

Love your bed

PRODUCED IN CHINA FOR:
Dreams Limited | Knaves Beech | High Wycombe | HP10 9YU www.dreams.co.uk
Hometime Retail Limited | 6-16 Duncrue Crescent | Belfast | Antrim | BT3 9BW www.dreams.ie