Aries Ottoman Bed

Small Double/Double/King

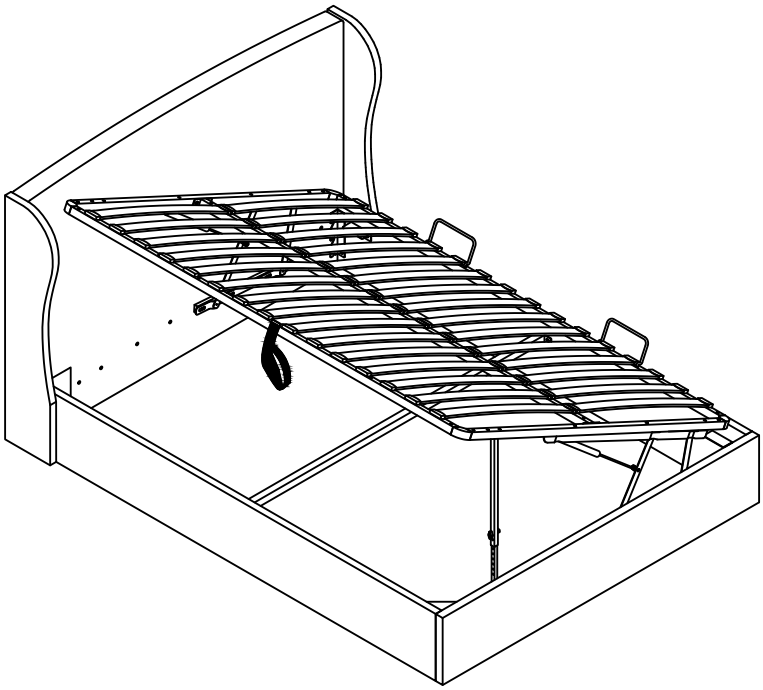

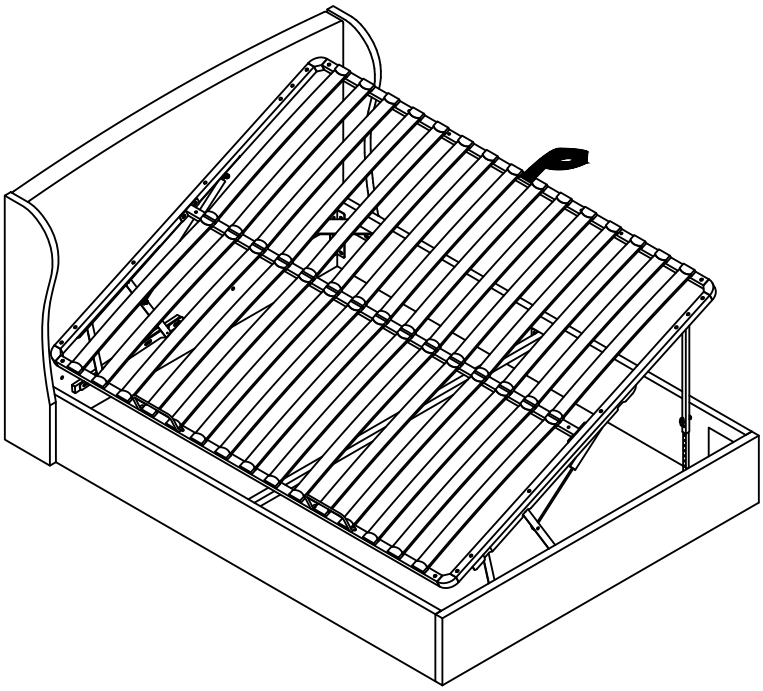

1 hour approx assembly time

Two person assembly

Dreams

Love your bed

V1 260904

IMPORTANT OTTOMAN SAFETY WARNINGS

- **IMPORTANT-READ CAREFULLY -RETAIN FOR FUTURE REFERENCE**
- **Ensure the combine bedding and mattress weight is within the recommended weight guidence.**
- **Adult Operation Only: Not recommended for the use by children under the age of 12 years old, Please note ease of operation is dependent on height and strength of user.**
- **Avoid Entrapment: Always lift the bed with the mattress in place, using the handle(s) to lift and lower the base, keeping clear of the mechanism.**

Recommended Mattress weight guidence for safe operation:

Bed	Bed Size	Min Weight (kg)	Max Weight (kg)
Aries Metal Slat Frame	Small Double	20	50
	Double	20	50
	King	20	50

IMPORTANT OTTOMAN SAFETY WARNINGS Cont.

- **Fully Open Ottoman: Ensure the ottoman is FULLY open before accessing the storage area.**
- **Avoid Hinge Area: Do not reach into the storage area through the hinge mechanism.**
- **Keep Children and Pets Away: Ensure children and pets stay away from the storage area, Do not stand inside the internal storage area of the bed.**
- **Do not attempt to lie on the mattress when the ottoman is in the raised position.**
- **Note: The bed uses a pressurised mechanism.**
- **Maintenance: Regulary inspect your bed to ensure it is functioning correctly.**

Ottoman Beds - Important Safety Features

Our aim is always to give you the best experience and to ensure every effort has been made to guarantee your comfort and safety. Please take time to look at these instruction as they will help remind you how to operate your ottoman bed safely.

Here's a few things you need to remember;

- **Pistons are already assembled, or occasionally need to be fitted, in their correct orientation – this improves piston performance and durability.**
- **"Break in " the piston seals on first use by raising & lowering the platform at least five times.**
- **Recommended mattress weights - do not exceed the maximum relevant weight specified in this Assembly Instruction.**
- **Ottoman support bar – always engage the support bar when accessing the ottoman storage area.**

Read all the instructions before using your Ottoman bed-frame and save the instruction booklet for future reference.

Ottoman Support Bar (O.S.B.)

For optimal safety during operation, always ensure the O.S.B. is engaged when accessing the ottoman storage area.

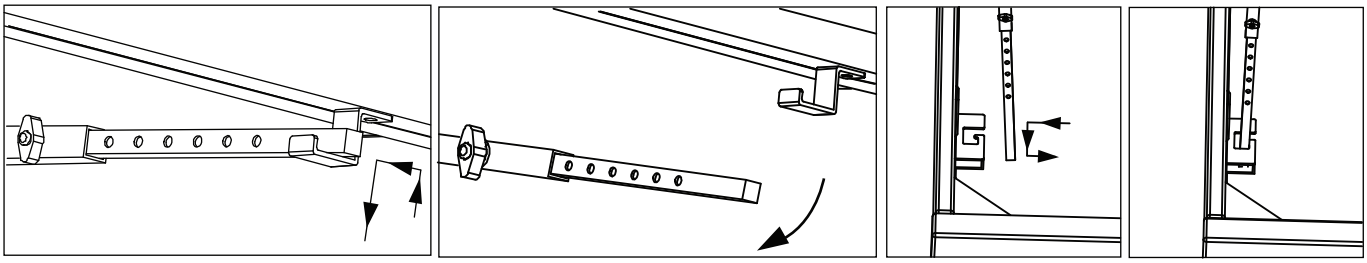

1. Always raise the ottoman slat-frame to it's highest position before using the storage area. Locate the end of the O.S.B and insert into the fixed retaining bracket on the bed frame.
2. When you are ready to lower the ottoman platform, return the O.S.B to its original parking position.
3. Always ensure that the O.S.B is in position when the ottoman is open, this prevents injury, or damage to the product.

Location of the O.S.B

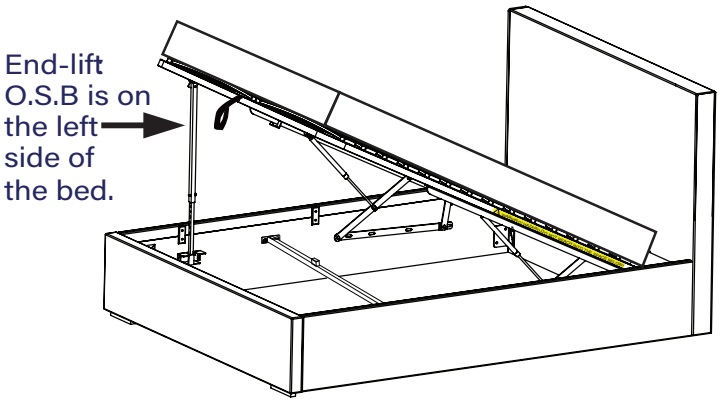

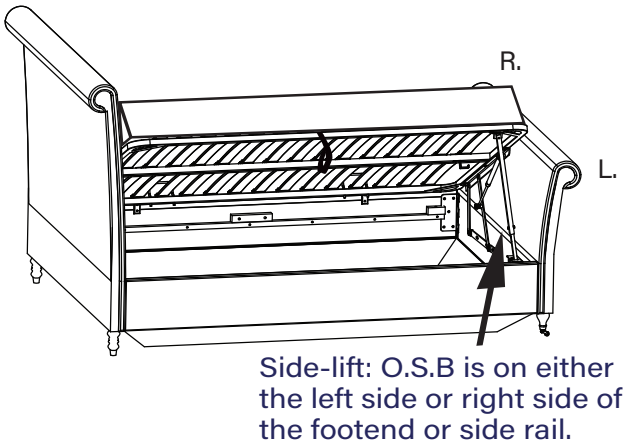

WARNING! Risk of Entrapment

- The pistons on the ottoman bed frame can support a maximum load (evenly spread) as indicated in the Minimum and Maximum load table, on Page 2 of this Assembly Instruction.
- Overloading the sleeping platform may contribute to damage to the product resulting in potential serious injury.
- Do not sit on the mattress whilst the platform is in motion or is in the raised position.
- Users should only get in and out of bed when platform is in the flat (horizontal) position.

Thank you

Hello, thanks for choosing to purchase your bed from Dreams - you're now on your way to your best ever night's sleep. Before you begin building your bed, please take a moment to read through the instructions and make sure that you've got all the relevant parts listed on the following pages.

Assembly tips

Before you begin, it's best to identify all parts and fittings to build your bed. We advise laying these out on the floor to check you have everything, and familiarising yourself before building.

Top tip

We recommend that you build your new bed in the room you'd like it to be located - this will help prevent any risk of damage to your newly built bed whilst moving it.

Safety and care

It's really important to ensure children and animals are kept away from the assembly area, as there are small components used in this bed which could present a choking hazard. All plastic and wrapping materials should also be kept away from children and animals to prevent any risk of suffocation.
To keep your little ones busy, there is a colouring page inside the back cover.

Help and support

At Dreams, it's our mission to give the whole nation a great night's sleep - this means that the quality of our products is of utmost importance to us. If there are any issues with your product or any missing parts, please visit our website at www.dreams.co.uk/help

Recycling

As part of our zero to landfill policy, we're more than happy to collect and recycle your old bed or mattress, ensuring no part goes to waste. We will also take away all your packaging for recycling at point of delivery. Please check out our services on www.dreams.co.uk/recycling-services for more information. If you do not want us to do this, please check with your local recycling centre on the best recycling method.

Parts

Important infomation

Please identify which base you have purchased with your bed frame as the assembly method may change. Once you have identified you have all of the relevant parts and fittings, please follow the instructions for your chosen base below;

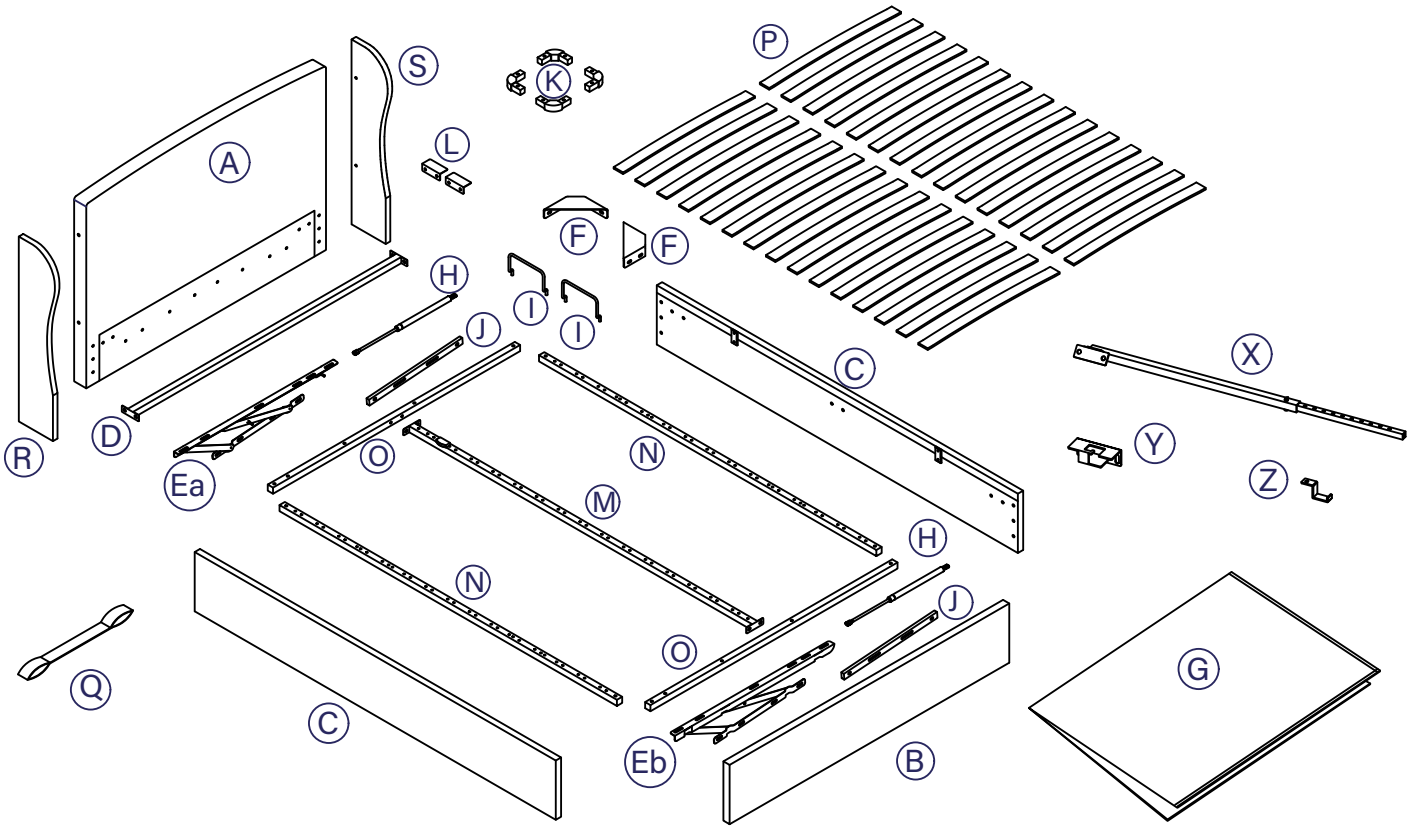

Parts list

A.	Headboard	1	M.	Slat frame - Centre		1
B.	Footboard	1	N.	Slat frame - Side Rail		2
C.	Side Rails	2	O.	Slat frame - End Rail		2
D.	Side Rail Cross Bar	1	P.	Bentwood Slat	SD/D/K	28/28/30
Ea & Eb.	Gas Lift Mechanisms	1 Pair	Q.	Fabric Lifting Strap		1
F.	Angled Corner Brackets	2	R.	Wing-Left		1
G.	Fabric Base Cover	1	S.	Wing-Right		1
H .	Gas Lift Pistons	2				
I.	Mattress Stoppers	2		Ottoman Support Bar pack (O.S.B.)		
J.	Gas Lift Mechanism - Spacer	2	X.	Ottoman support bar		1
K.	Plastic Corner	4	Y .	Fixed retaining bracket		1
L.	'L' Shape Bracket	2	Z.	Parking bracket		1

Fittings

Please check you have all the parts listed below with your product:

PLEASE NOTE: There are bolts which have been pre-fitted to the headboard & footboard (A&B) not included below - please study Step 2 carefully.

Hardware needed for fixing side rails & gas-lift mechanisms to headboard & footboard
Packed in side rail carton Pack 2-- hardware pack (A)

a

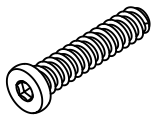

Ref: Bolts(M8x45mm)
Quantity: x8pcs

c

Ref: Bolts(M8x25mm)
Quantity: x28pcs

d

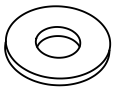

Ref: Flat washer for M8
Quantity: x36pcs

e

Ref: Spring washer for M8
Quantity: x36pcs

l

Ref: Allen Key for M8 bolts
Quantity: x1pc

h

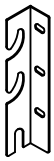

Ref: Corner Bracket- Lef
Quantity: x2pcs

i

Ref: Corner Bracket- Right
Quantity: x2pcs

j

Ref: Slat-End Cap
Quantity:
SD/Double x28pcs
King x30pcs

k

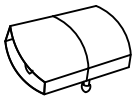

Ref: Slat-Centre Cap
Quantity:
SD/Double x14pcs
King x15pcs

Hardware needed for fixing ottoman support bar (O.S.B) to the side rail
Packed inside the Ottoman Support Bar carton, inside Pack 2-- hardware pack (B)

e

Ref: Spring washer for M8
Quantity: x5pcs

d

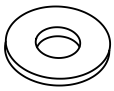

Ref: Flat washer for M8
Quantity: x5pcs

m

Ref: Bolts (M8x25mm)
Quantity: x5pcs

X

Ref: Ottoman Support Bar
Quantity: x1pc

Y

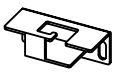

Ref: Fixed retaining bracket
Quantity: x1pc

Z

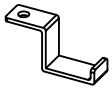

Ref: Parking bracket
Quantity: x1pc

Fittings

Please check you have all the parts listed below with your product:

Hardware needed for fitting the metal ottoman slat frame
Packed in metal ottoman slat-frame Pack 2-- hardware pack (C)

a

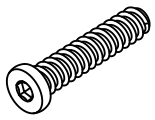

Ref: Bolts(M8x45mm)
Quantity: x6pcs

c

Ref: Bolts(M8x25mm)
Quantity: x12pcs

d

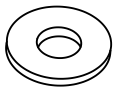

Ref: Flat washer for M8
Quantity: x24pcs

e

Ref: Spring washer for M8
Quantity: x18pcs

f

Ref: Nut For M8 Bolts
Quantity: x6pcs

g

Ref: Flanged Lock-Nut M8
Quantity: x4pcs

m

Ref: Spanner for M8 Nuts
Quantity: x1pc

Hardware needed for fixing Wing for headboard
Packed in side rail carton Pack 1 -- hardware pack (D)

a

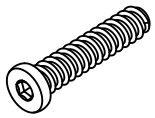

Ref: Bolts(M8x45mm)
Quantity: x4pcs

d

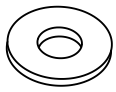

Ref: Flat washer for M8
Quantity: x4pcs

e

Ref: Spring washer for M8
Quantity: x4pcs

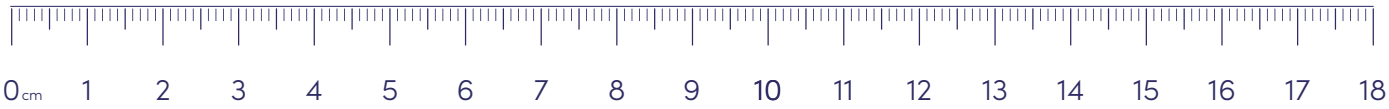

Tools required

Please check you have all these below:

Flathead screwdriver

Scissors

Spanner

Tape measure

Cross head screwdriver

Ottoman assembly

Use pack 1

1

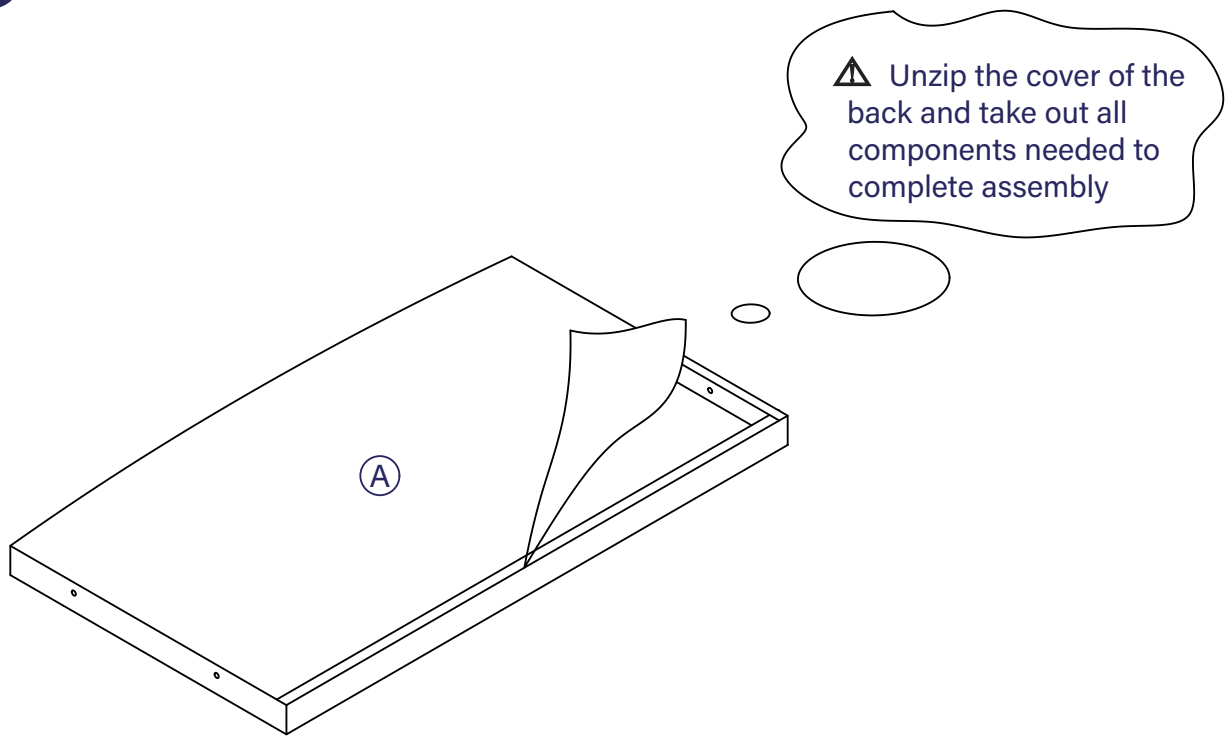

Use pack 2

2

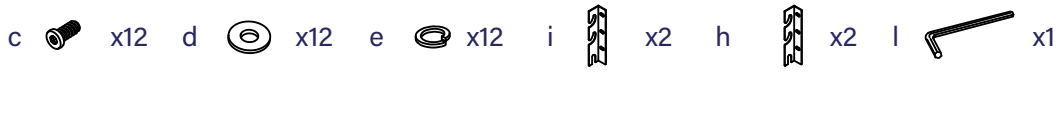

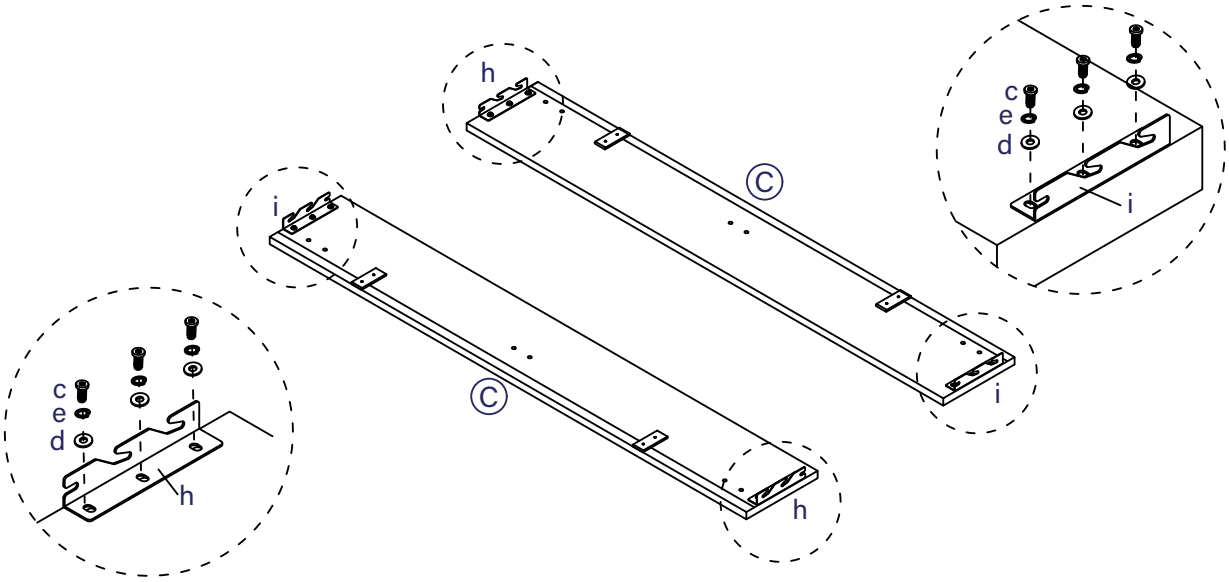

Ottoman assembly

Use pack 1 and pack 2

3

Hardware pre-fitted to the headboard & footboard (A&B)

x12

Bolts (M8x25mm)

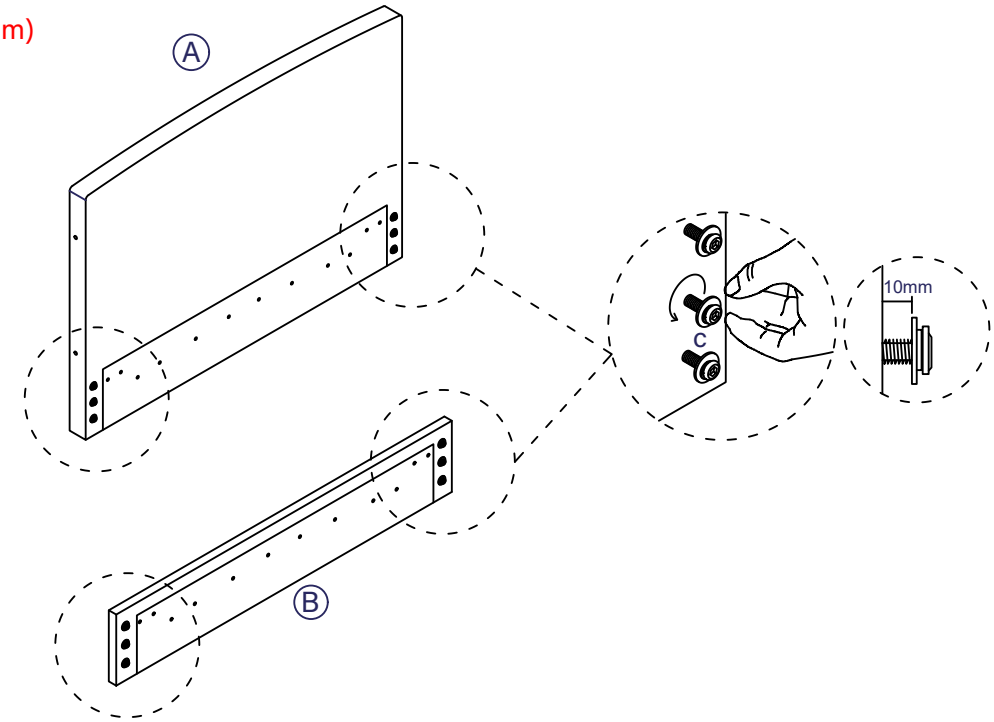

4

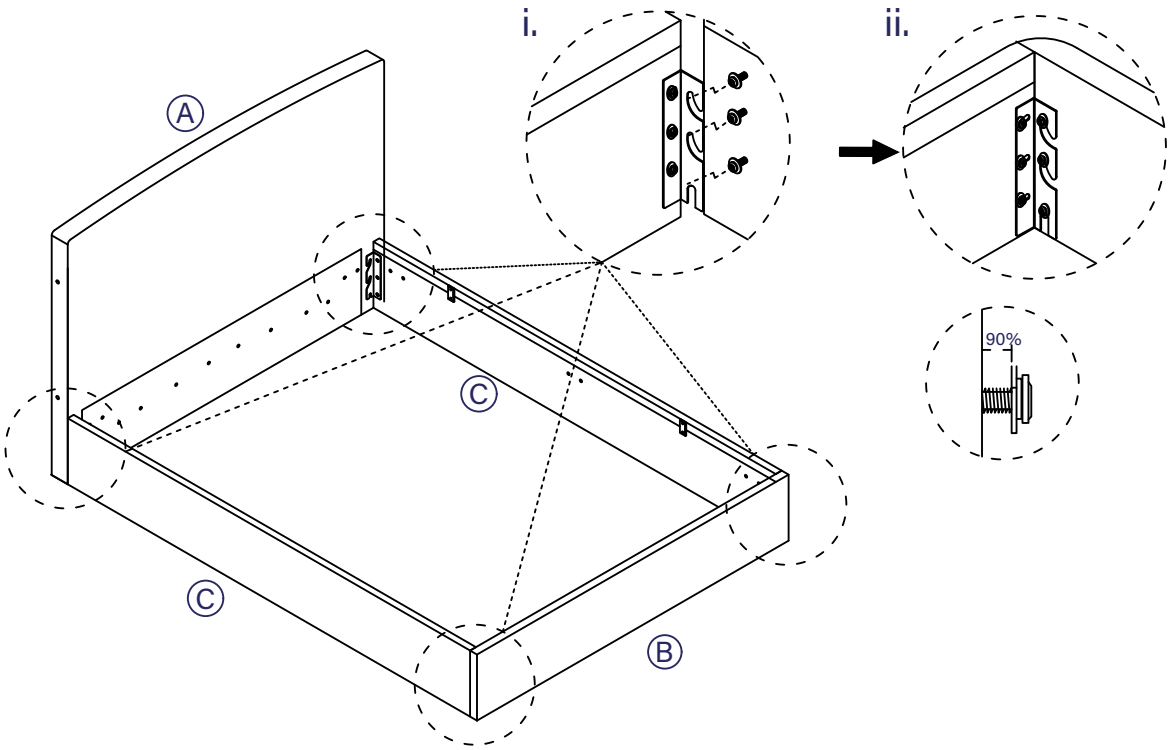

Ottoman assembly

5

a x4 e x4 d x4 l x1

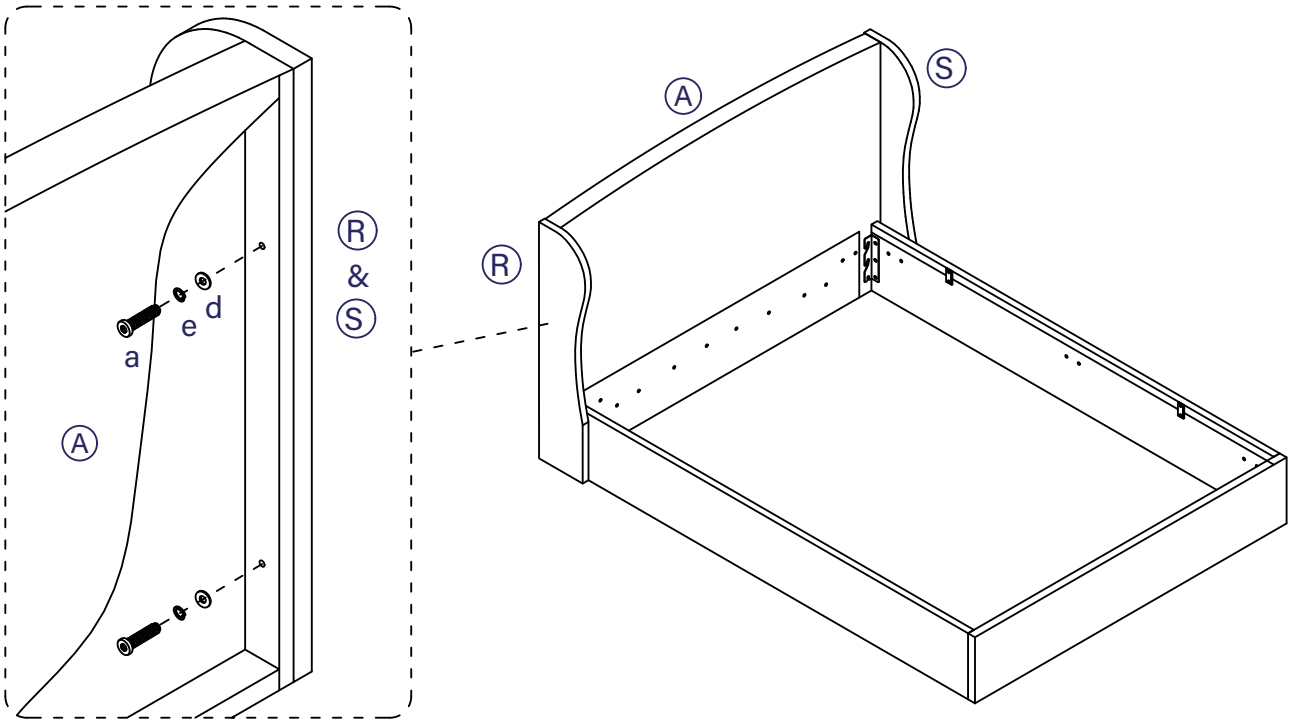

Use pack 2

a x8 d x8 e x8 l x1

6a

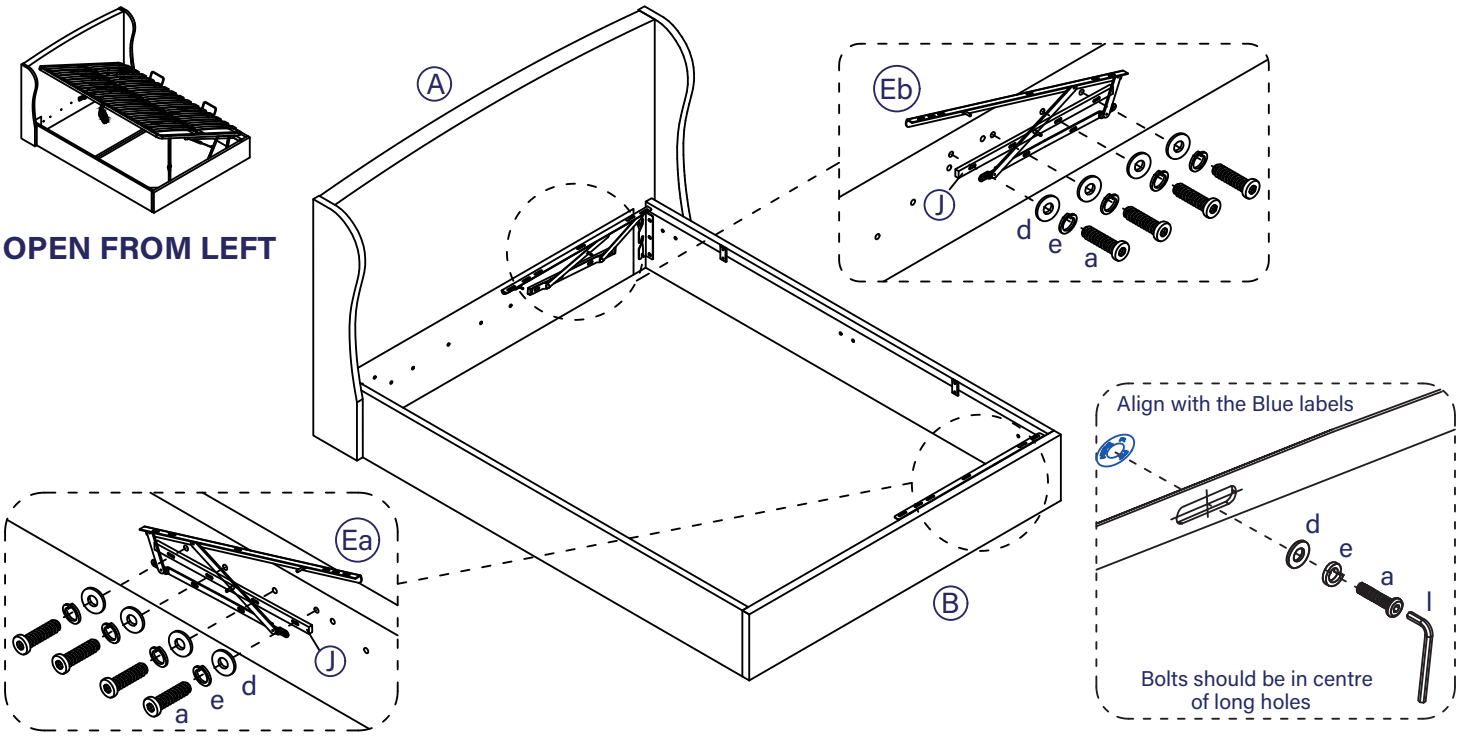

Ottoman assembly

Use pack 2

a x8 d x8 e x8 l x1

6b

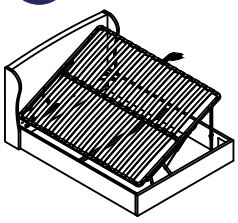

OPEN FROM RIGHT

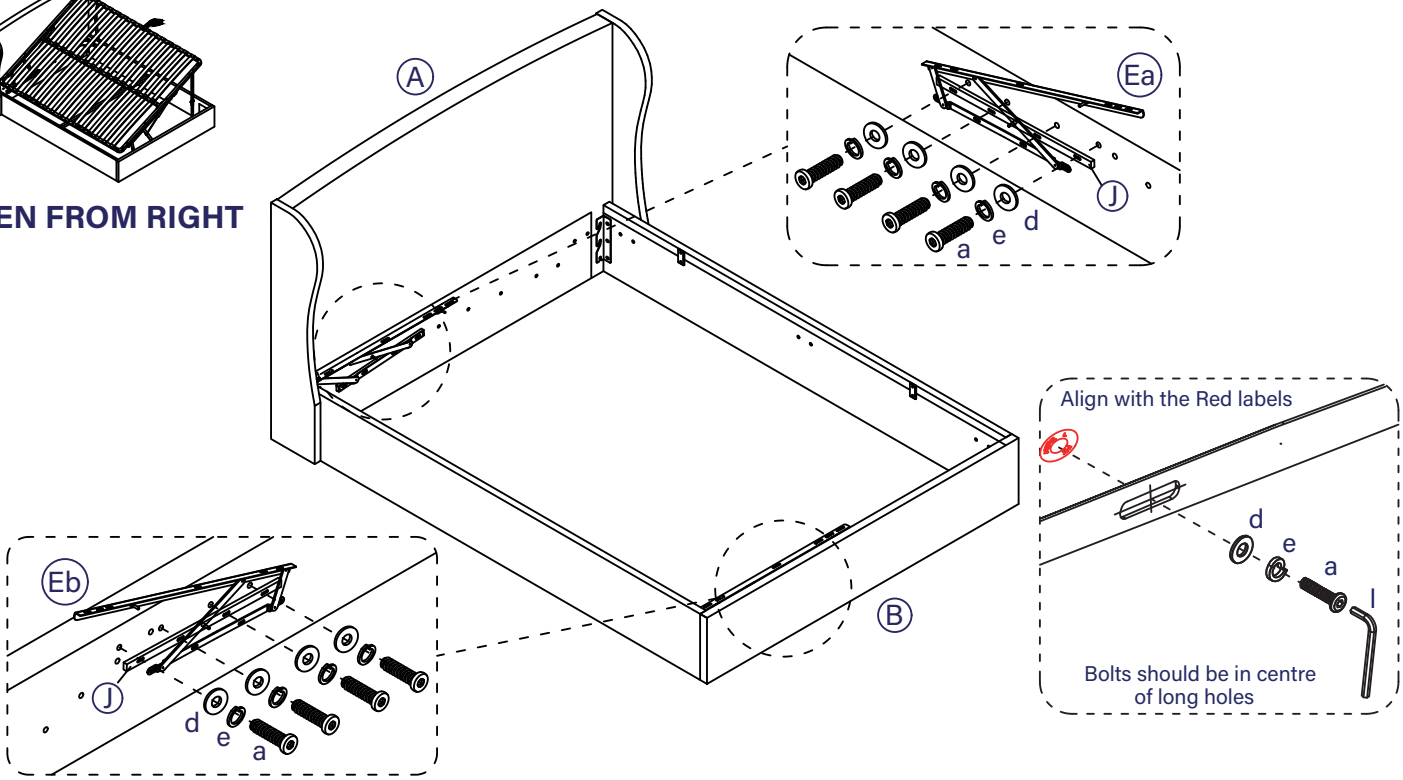

Use pack 2

c x12 d x12 e x12 l x1

7a

OPEN FROM LEFT

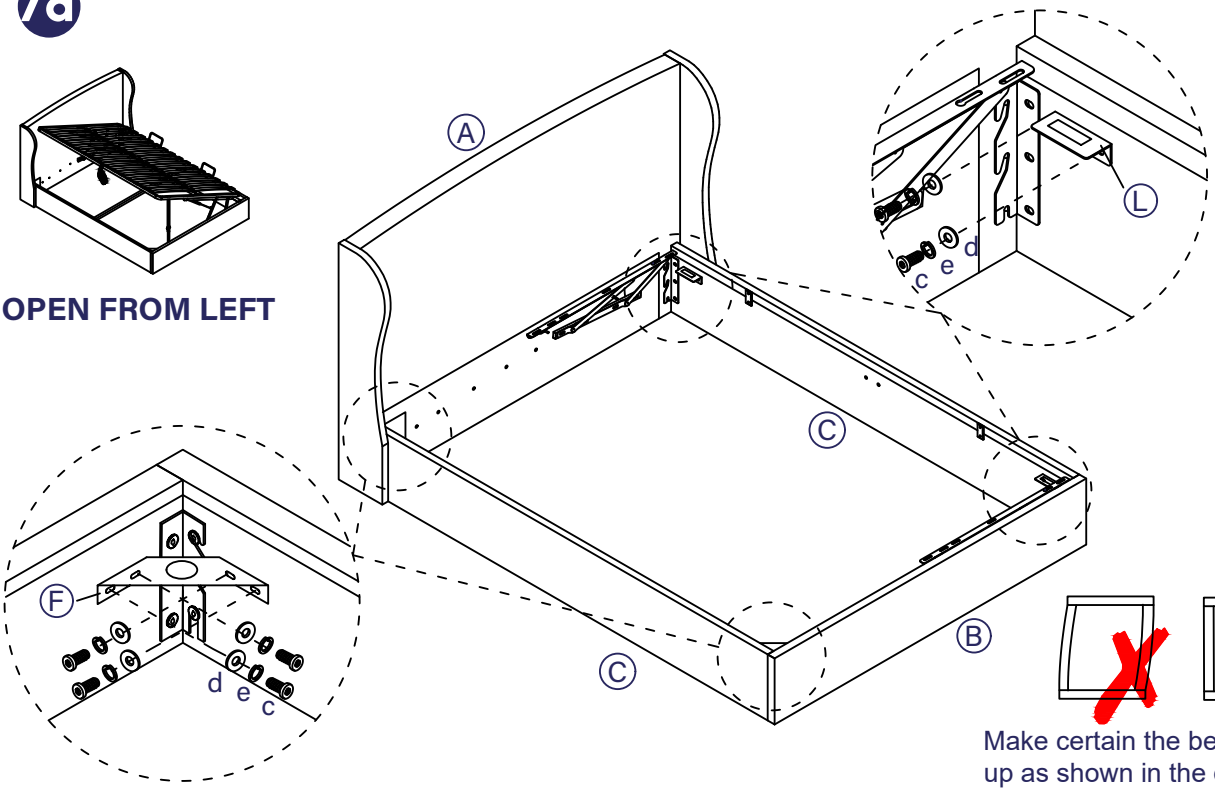

Make certain the bed is squared up as shown in the diagram then tighten all bed assembly bolts 100%.

Ottoman assembly

Use pack 2

c x12 d x12 e x12 l x1

7b

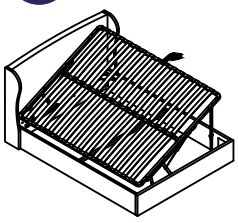

OPEN FROM RIGHT

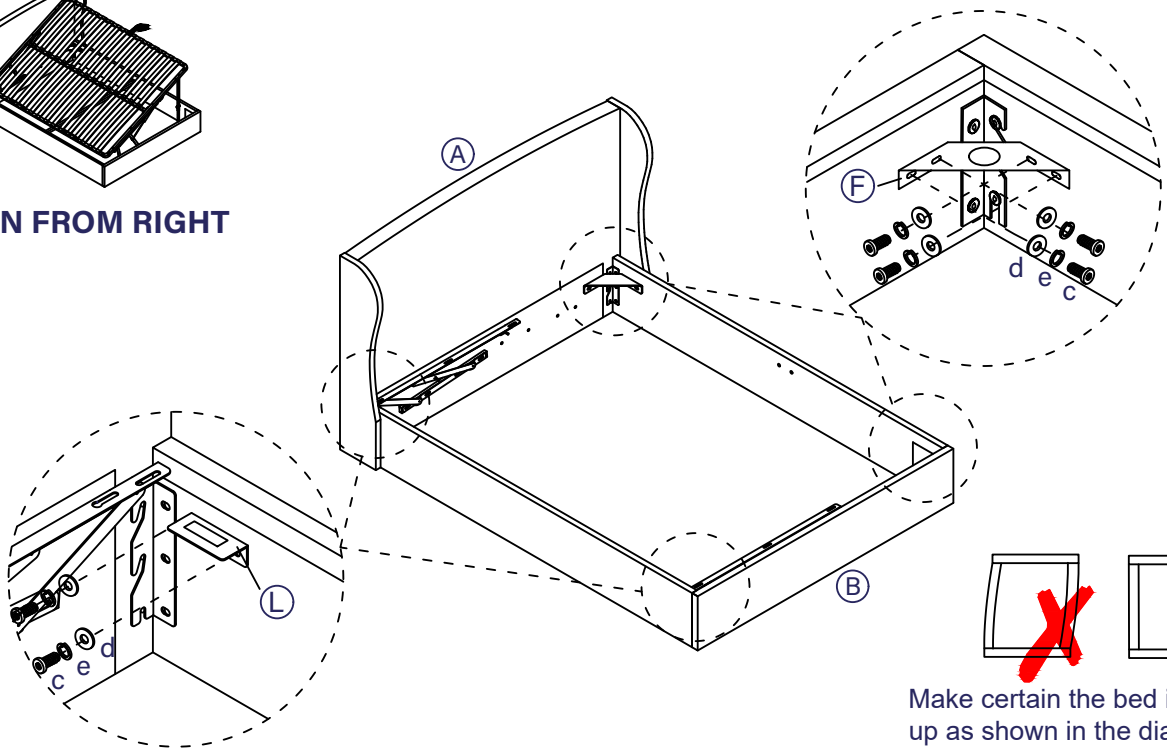

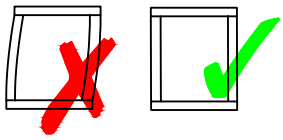

Make certain the bed is squared up as shown in the diagram then tighten all bed assembly bolts 100%.

Use pack 2

c x4 d x4 e x4 l x1

8 Prepare the slat-frame.

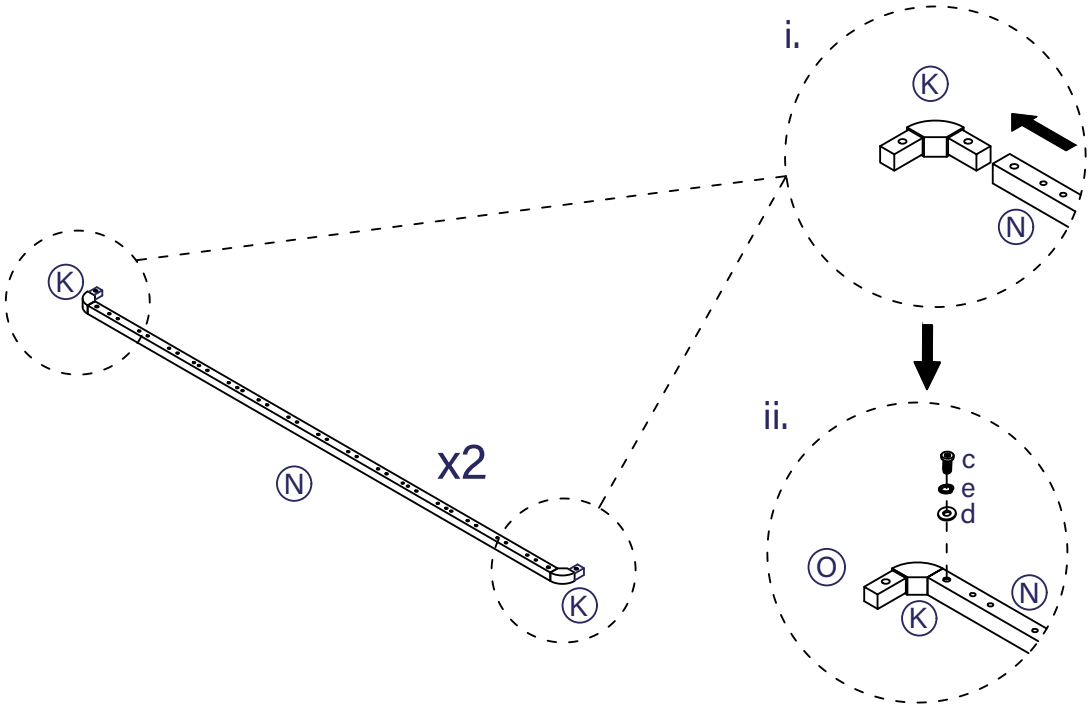

Ottoman assembly

Use pack 2

9

c x4 d x4 e x4 l x1

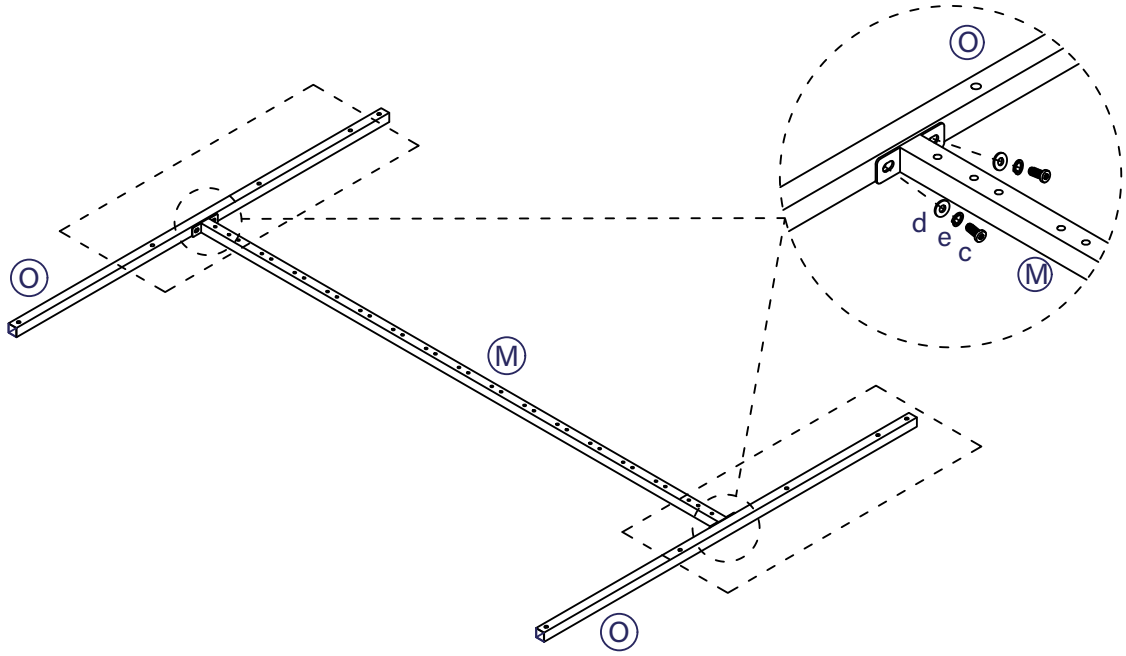

Use pack 2

10

c x4 d x4 e x4 l x1

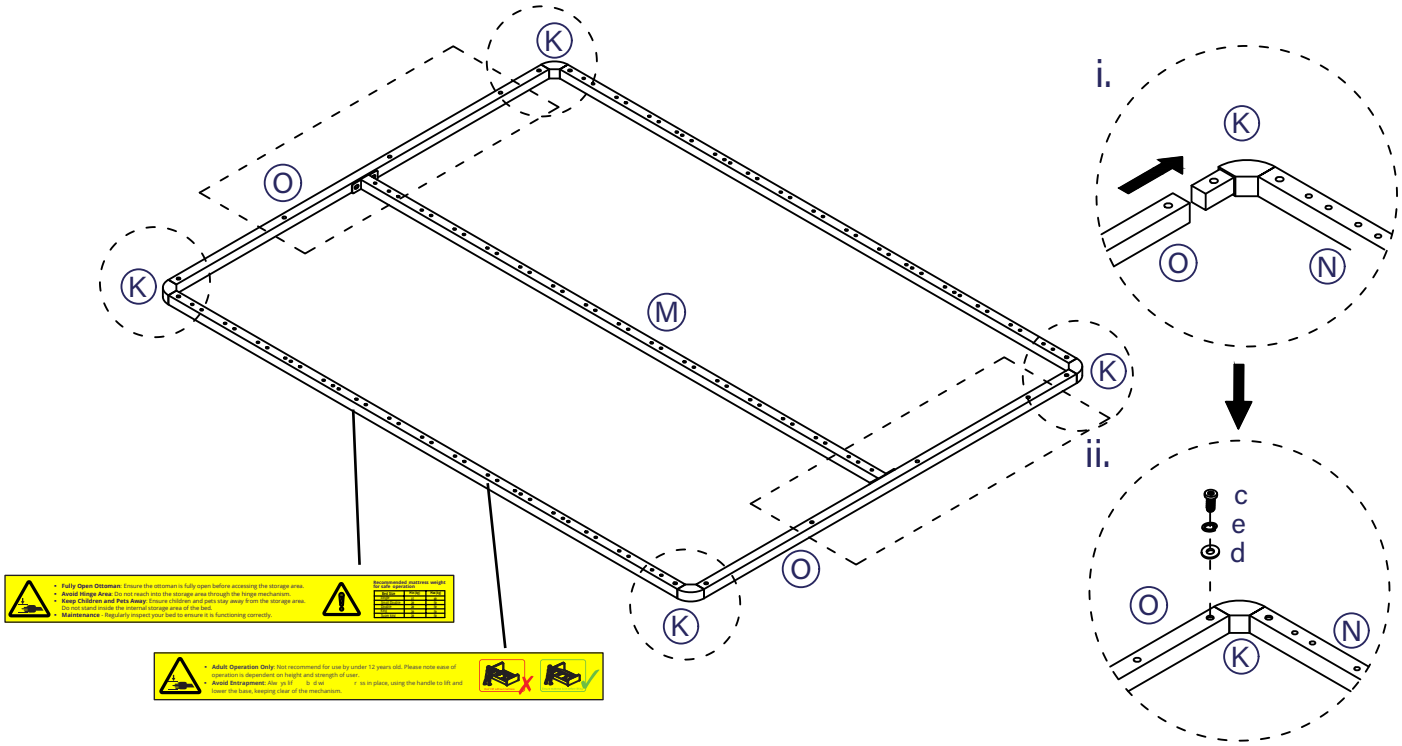

Ottoman assembly

Use pack 2

11

a x6 d x12 e x6 f x6 l x1 m x1

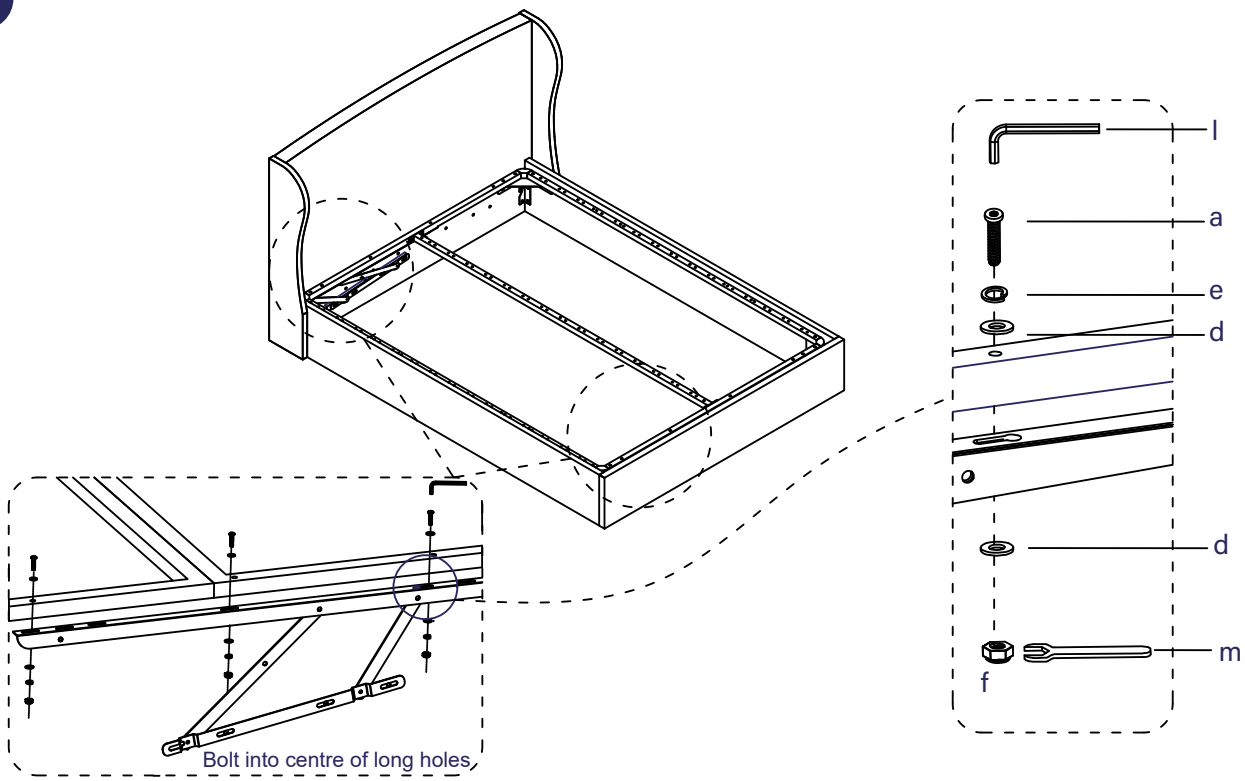

Use pack 2

12 **Loosely fit both piston stems to the upper axles**

g x2 m x1

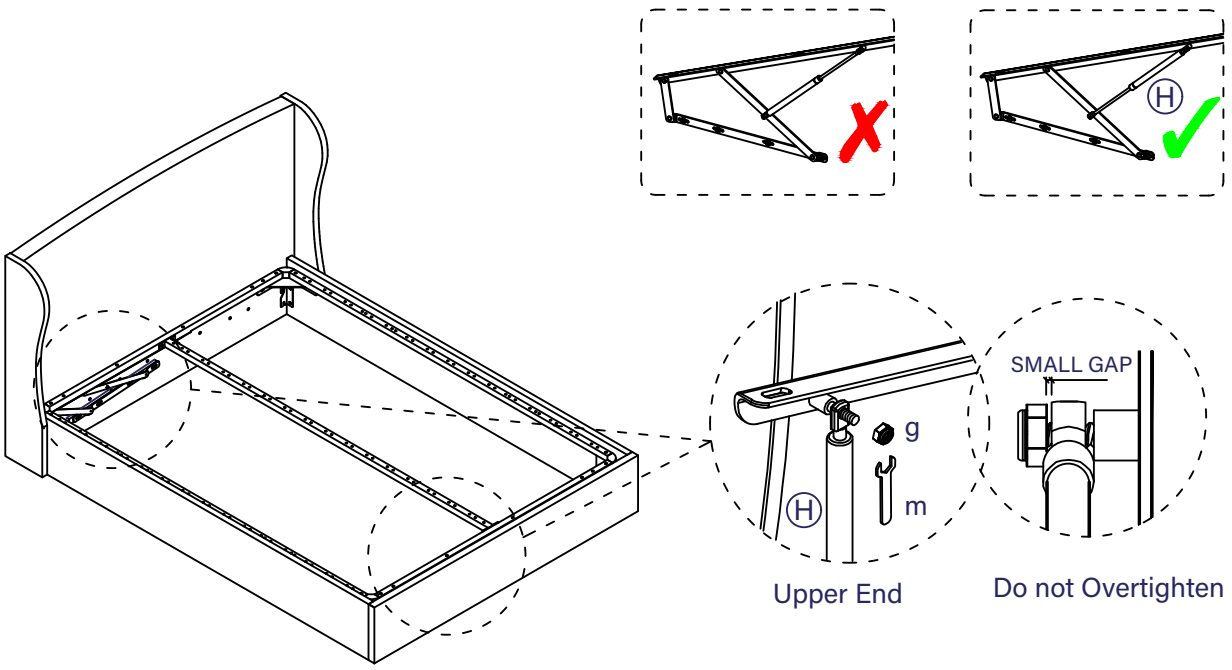

Ottoman assembly

Use pack 2

SD&Double	k	x14	j	x28
King	k	x15	j	x30

13

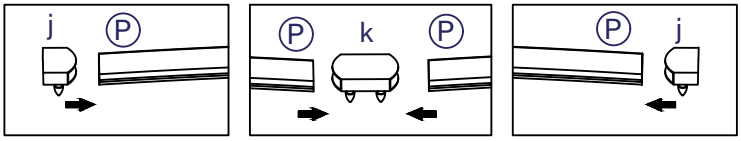

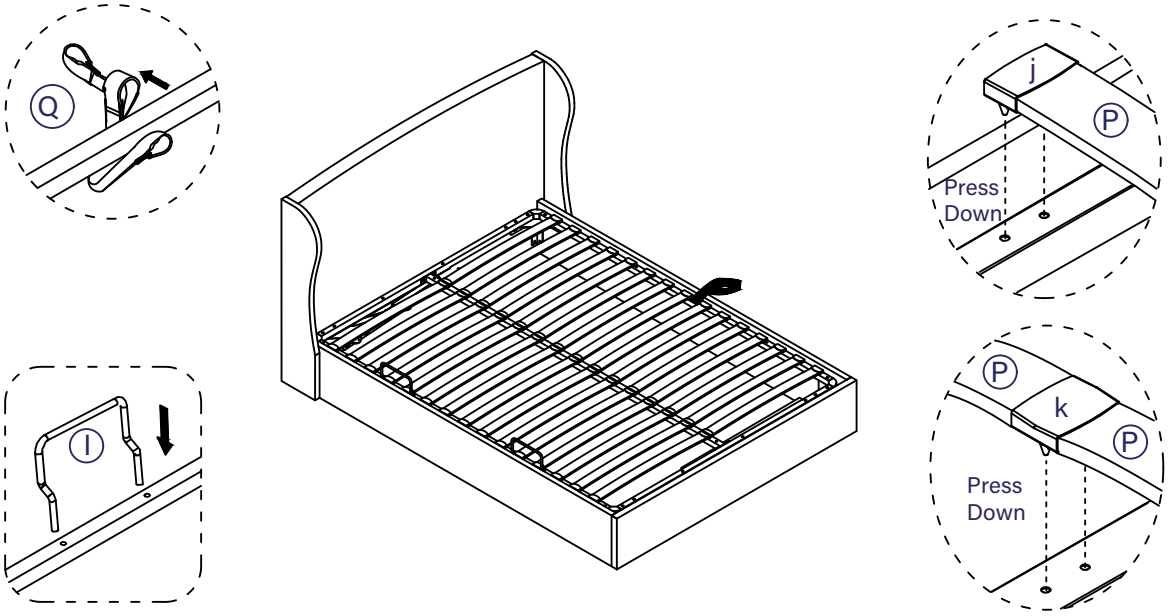

14 Fit the gas-lift pistons to the mechanisms.

g x2 m x1

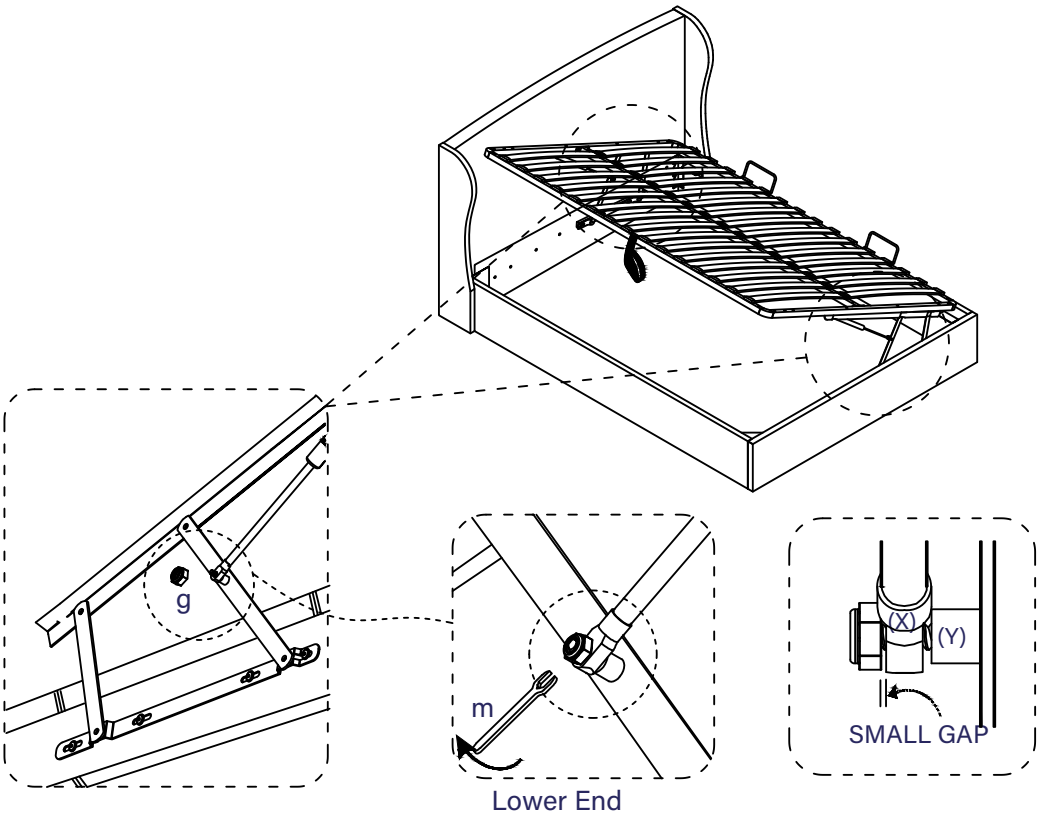

Ottoman assembly

Use pack 2

15

c x4 d x4 e x4 l x1

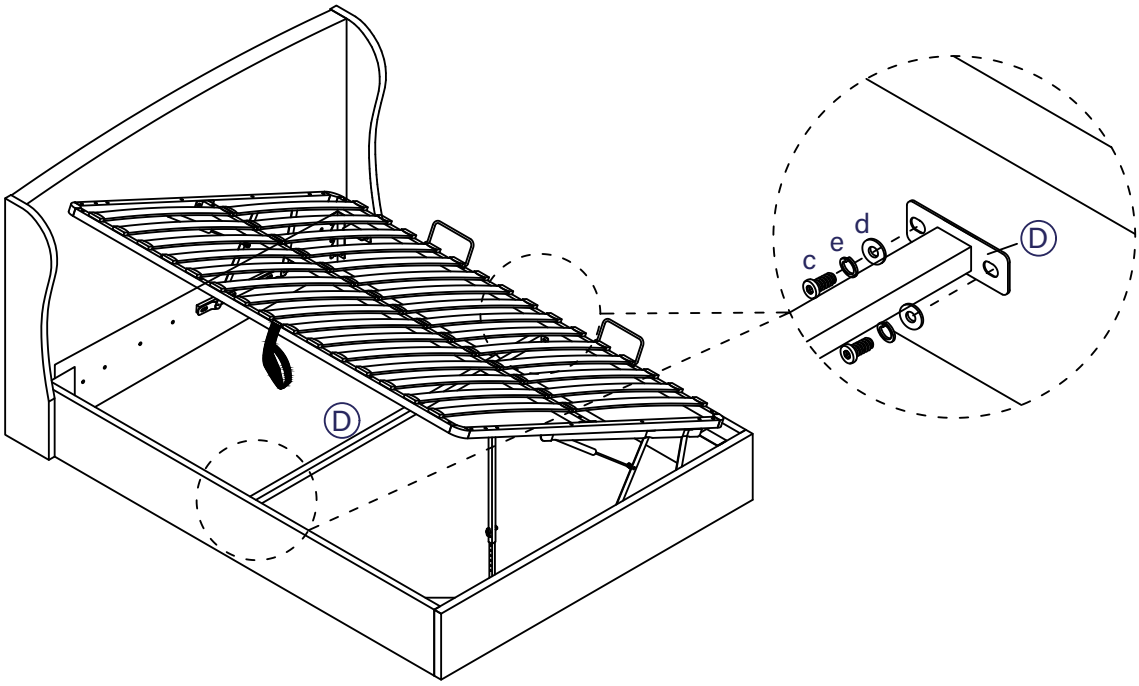

Use pack 2

16 **Unpack the contents of the Ottoman Support Bar (O.S.B.).**

m x5 d x5 e x5 l x1

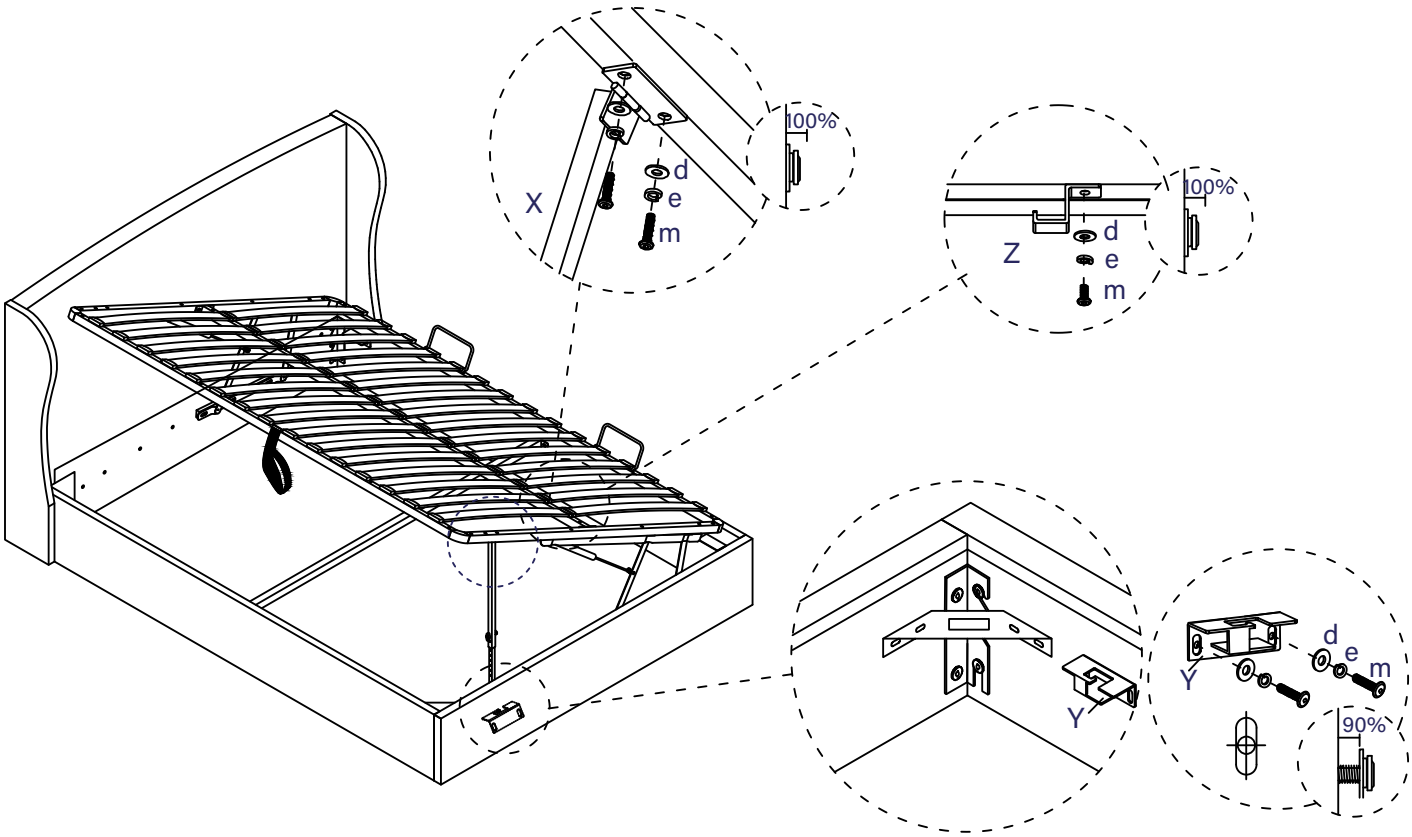

Ottoman assembly

Use pack 2

17 **Setting the inner stem of the support bar (X), adjust the inner stem to the correct length.**

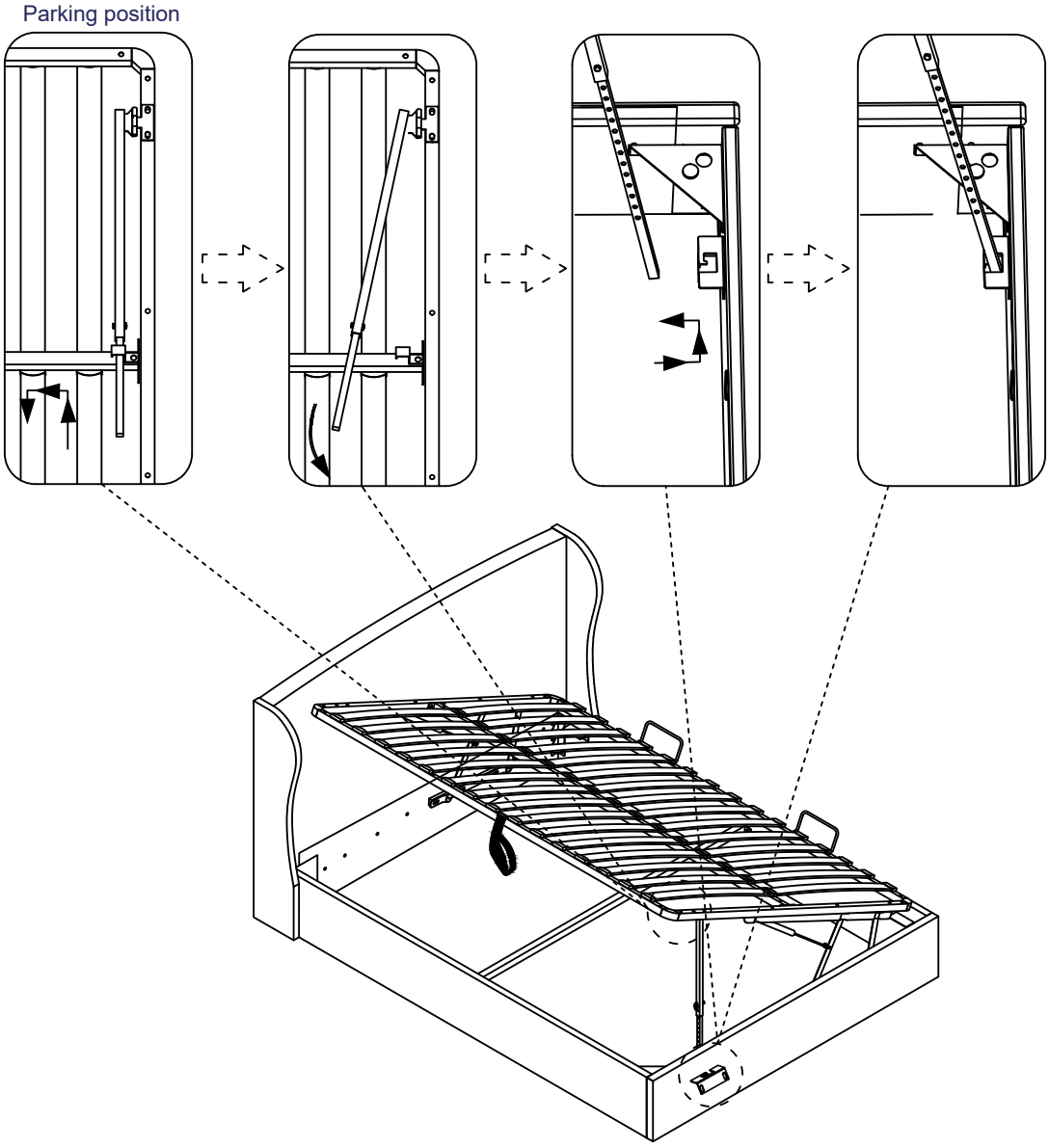

Adjust the inner stem so that its end just touches the retaining bracket. The stem must remain in contact with the bracket to retain the support bar in position.

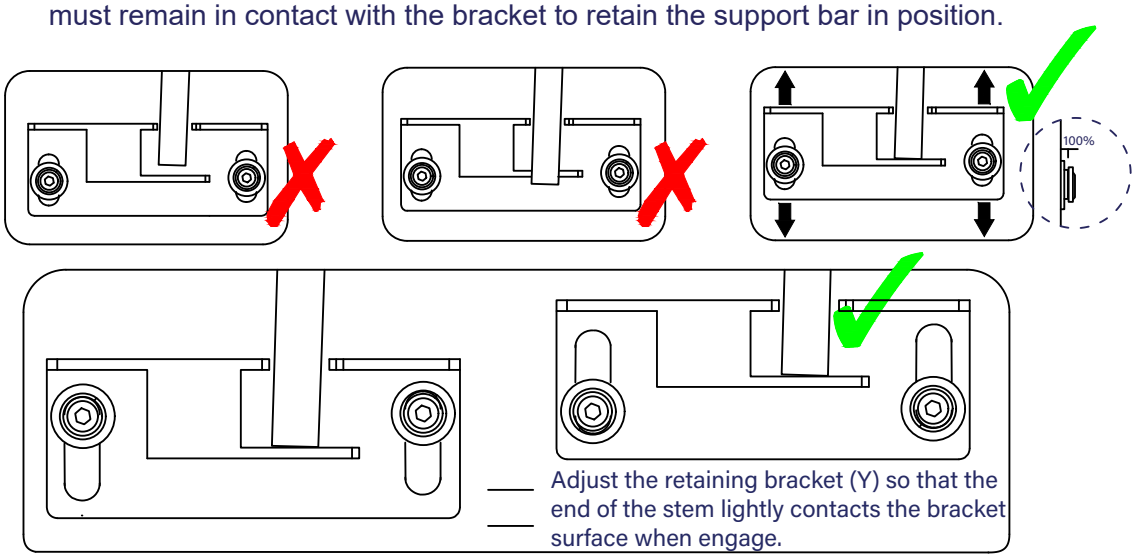

Ottoman assembly

Use pack 1

18 **With the bed in it's final location, fit the fabric base cover (G) evenly around the inside of the bed.**

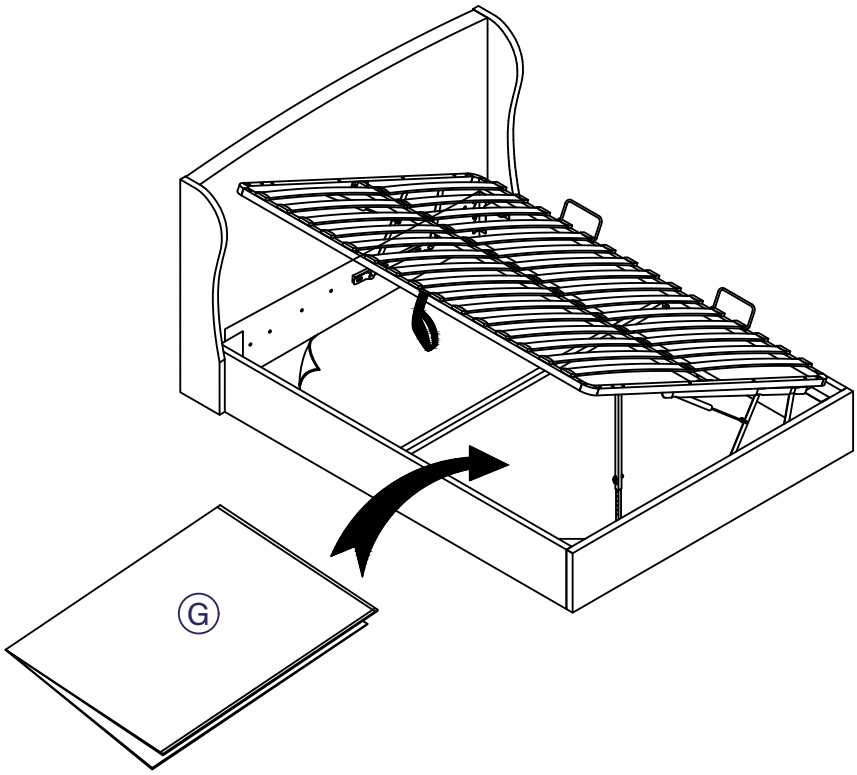

Warnings - Section A: Metal Slat Frame Version

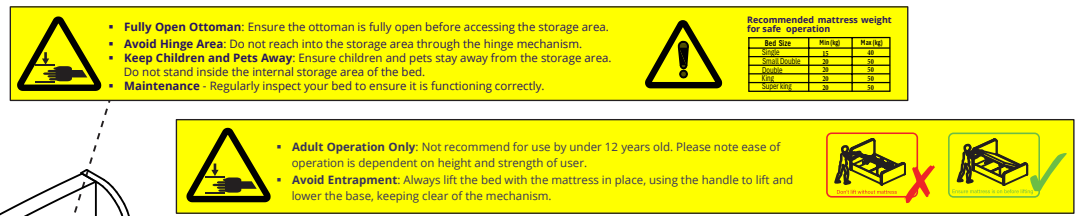

- **Fully Open Ottoman**: Ensure the ottoman is fully open before accessing the storage area.
- **Avoid Hinge Area**: Do not reach into the storage area through the hinge mechanism.
- **Keep Children and Pets Away**: Ensure children and pets stay away from the storage area. Do not stand inside the internal storage area of the bed.
- **Maintenance** - Regularly inspect your bed to ensure it is functioning correctly.

Recommended mattress weight for safe operation

Bed Size	Min(kg)	Max(kg)
Single	15	40
Small Double	30	50
Double	30	50
King	30	50
Super king	30	50

- **Adult Operation Only**: Not recommend for use by under 12 years old. Please note ease of operation is dependent on height and strength of user.
- **Avoid Entrapment**: Always lift the bed with the mattress in place, using the handle to lift and lower the base, keeping clear of the mechanism.

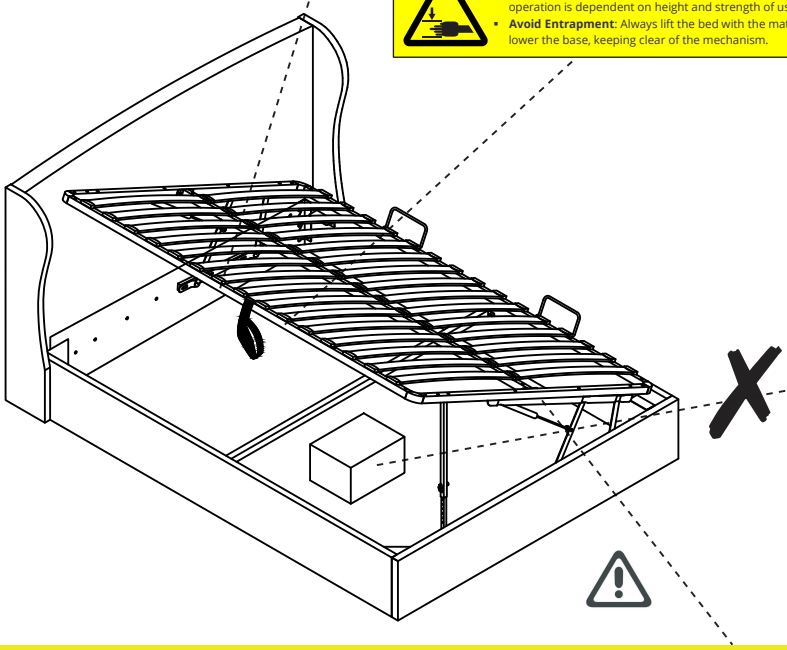

Note: Be very careful what you store under the bed - the top of an item, like a suitcase or a box, must not touch the slats or they may be damaged. Maximum storage height is 220 mm .

⚠ WARNING! HAZARD - DO NOT REACH INTO THE SPACE BELOW!

Care and maintenance

Here are some tips to keep your new bed in tip-top condition

Cleaning

To clean your new bed, we'd advise using a warm damp cloth - please do not use abrasive chemicals or bleach as this may damage the product.

Checking and moving

Periodically we recommend you check that the screws or fixtures haven't been become loose, over time. To move your new bed, we recommend lifting it where possible, as dragging or pushing it could cause damage to your flooring.

Wood

Please note each of our wooden pieces are unique, meaning that markings and shade can vary slightly between beds. Over a period of time, the wood might lighten or fade slightly due to light exposure.

Fabric

Please note depending on the lighting, positioning and surroundings of your room, the shade of the colour can sometimes appear slightly different. Over a period of time, the colour might lighten or fade slightly due to light exposure.

Metal

Metal tends to be more resilient to everyday wear and tear. We recommend to gently dust your metal furniture and keep it dry to maintain its look.

Thank you for shopping with us - we hope you have a great night's sleep

Sleep well

Little dreamers

Keep the little ones entertained while you assemble your new purchase.

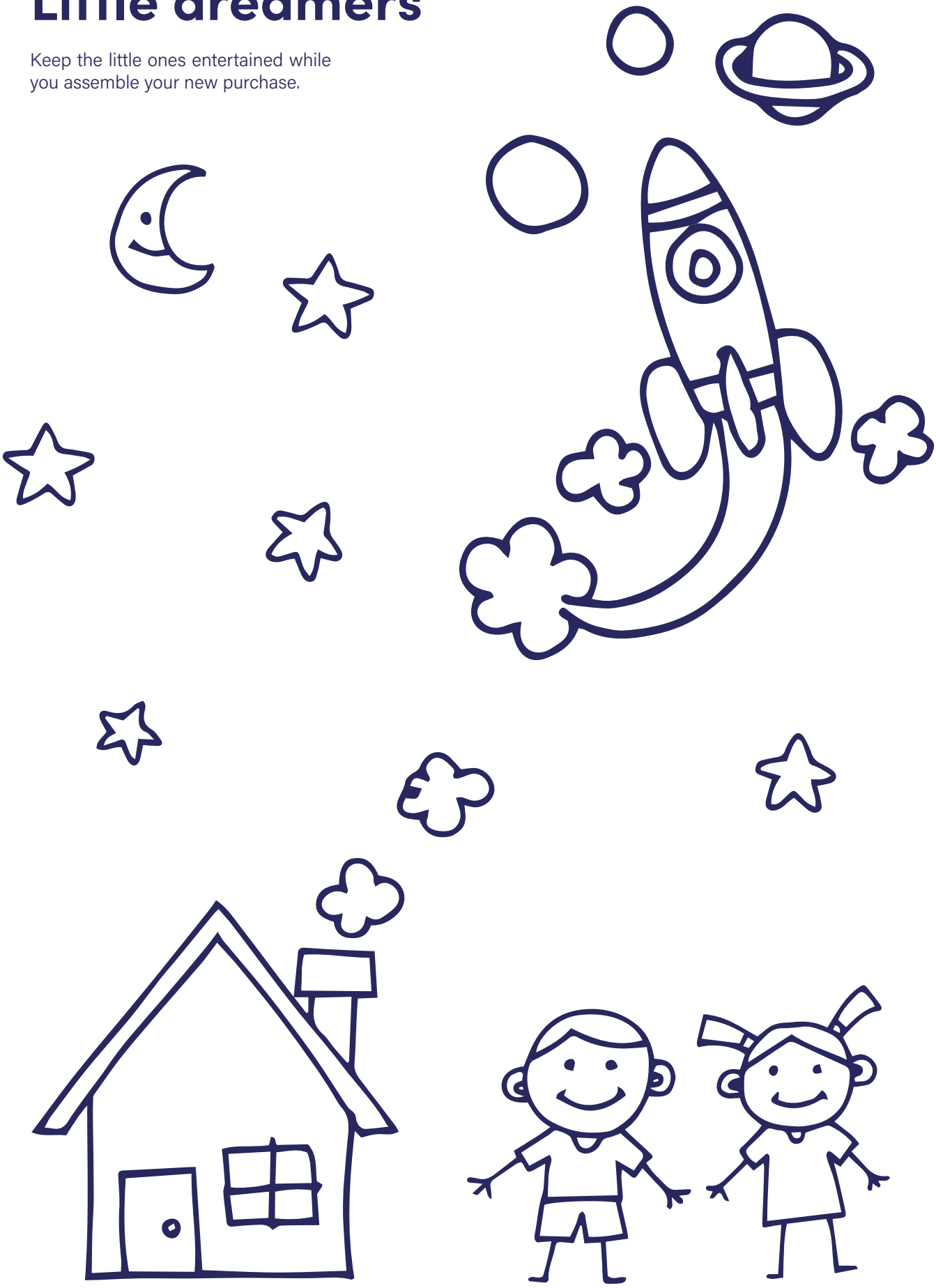

Dreams

Love your bed

PRODUCED IN CHINA FOR

Dreams Limited | Knaves Beech | High Wycombe | HP10 9YU | www.dreams.co.uk

Hometime Retail Limited | 6-16 Duncrue Crescent | Belfast | Antrim | BT3 9BW | www.dreams.ie