Dreams

Richmond Bed - Double, King & Super King

Assembly Instructions

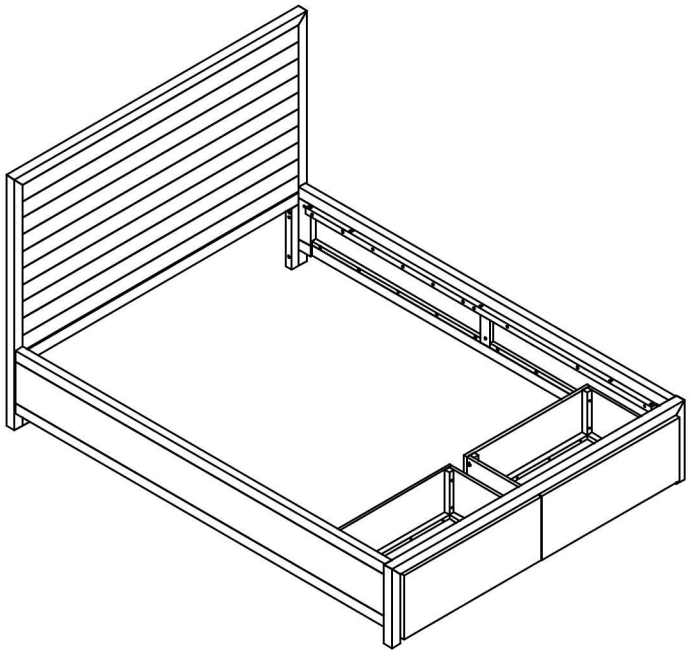

Minimum No.of people recommended to assemble this product: 2

Approx assembly time: 3/4 hours

Before you Start, here are some helpful advices.

1. We suggest you spend a short time reading through this leaflet and then follow the simple step by step instructions.
2. If you follow the instructions carefully the end result should be worth the effort.
3. Do not discard any of the packaging until you have checked that you have all the parts and the pack of fittings.
4. Assemble this product on a carpet.
5. To ensure an easier assembly, we strongly advise that all fittings are only finger tightened during initial assembly. Only upon completion of the assembly should all fixing points be fully tightened.
6. We recommend a periodic check on all fixing points to make sure they remain fully tightened.
7. Keep glue and fittings out of children's reach.

the unlikely event that this product has missing or damaged parts, please call 0344 292 0000 to obtain spares

PARTS

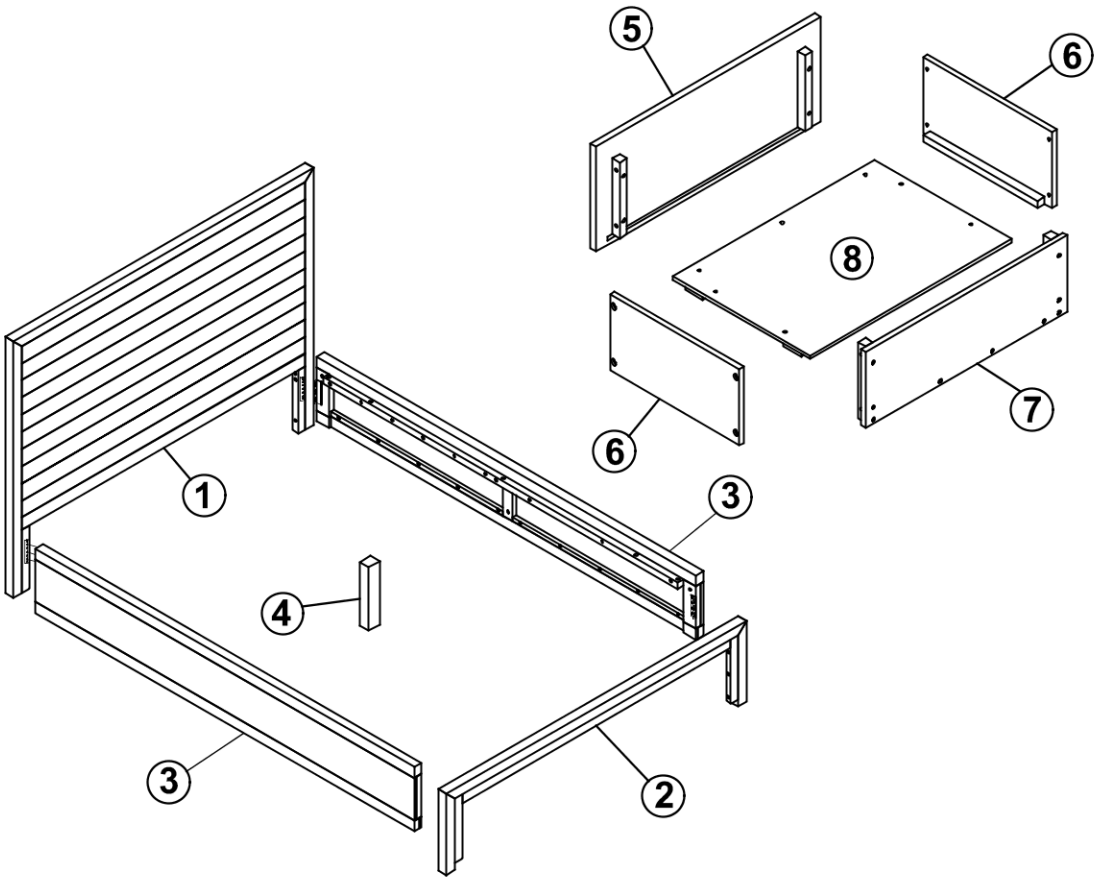

NO. PART LIST	QTY
(1) HEADBOARD	1
(2) FOOTBOARD	1
(3) SIDE RAILS	2
(4) SUPPORT LEG	1
(5) FRONT DRAWER	2
(6) DRAWER SIDES	4
(7) BACK DRAWER	2
(8) BOTTOM DRAWER	2

Fittings

A	M6 x 45mm x 6 pcs
B	Nut M6 x 6 pcs
C	M4Allen key x 2pcs
D	M6 Washer x 6 pcs
E	M4 x 35mm Screw
F	M6 x 25mm x 15 pcs
G	M6 Washer x 15 pcs
H	M6 Washer x 15 pcs
I	M4x15mm Screw x 16 pcs
K	Wheel x 8 pcs

ASSEMBLY

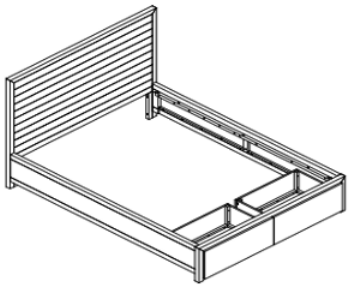

- Use bolt (mounted on the Headboard and Footboard) to fix the Side Rail (3) onto Headboard (1) and Footboard (2) by using Allen Key (C).

STEP 1

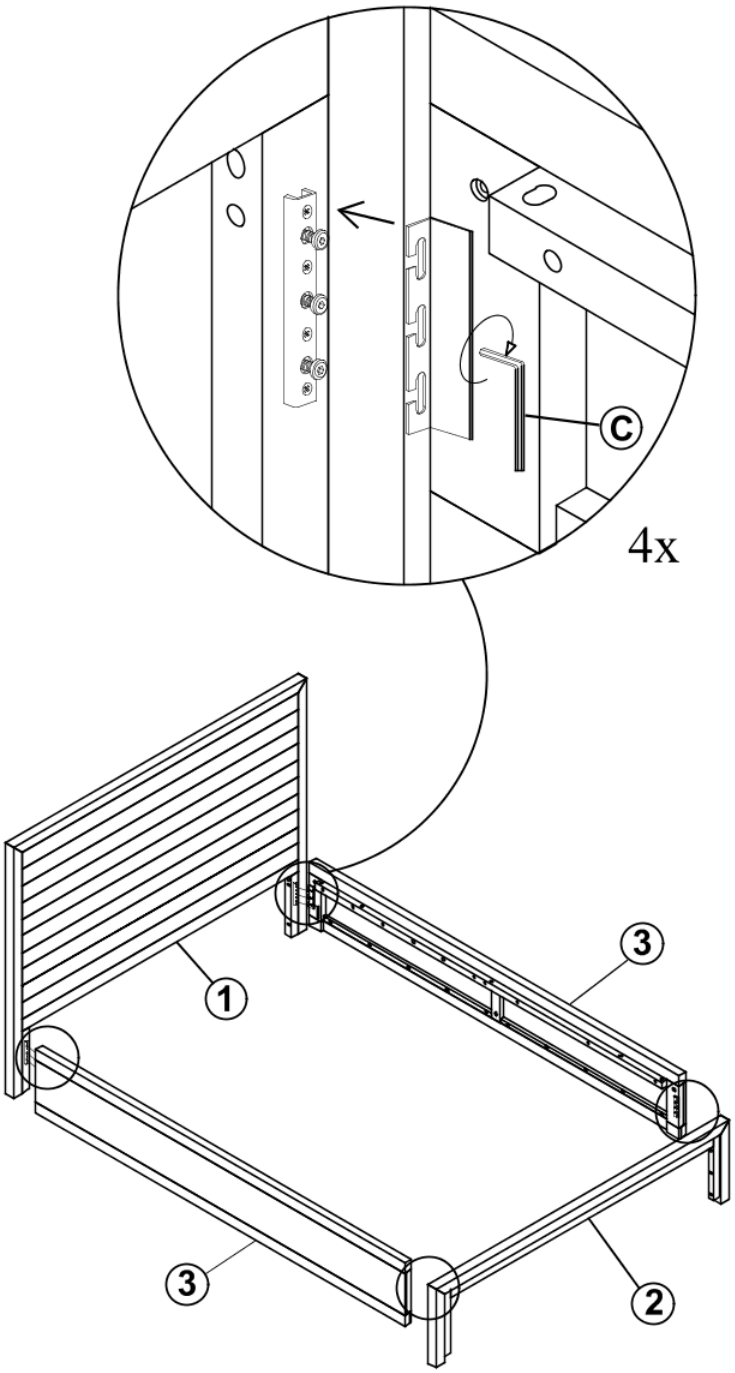

ASSEMBLY

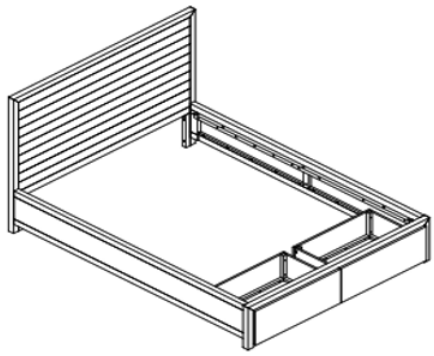

- Assembly the Front Drawer (5) to two Side Drawers (6) and Back Drawer (7) with Bolt (F) plus Flat Washer (G) and Lock Washer (H) using Allen Key (C).

STEP 2 - 2X

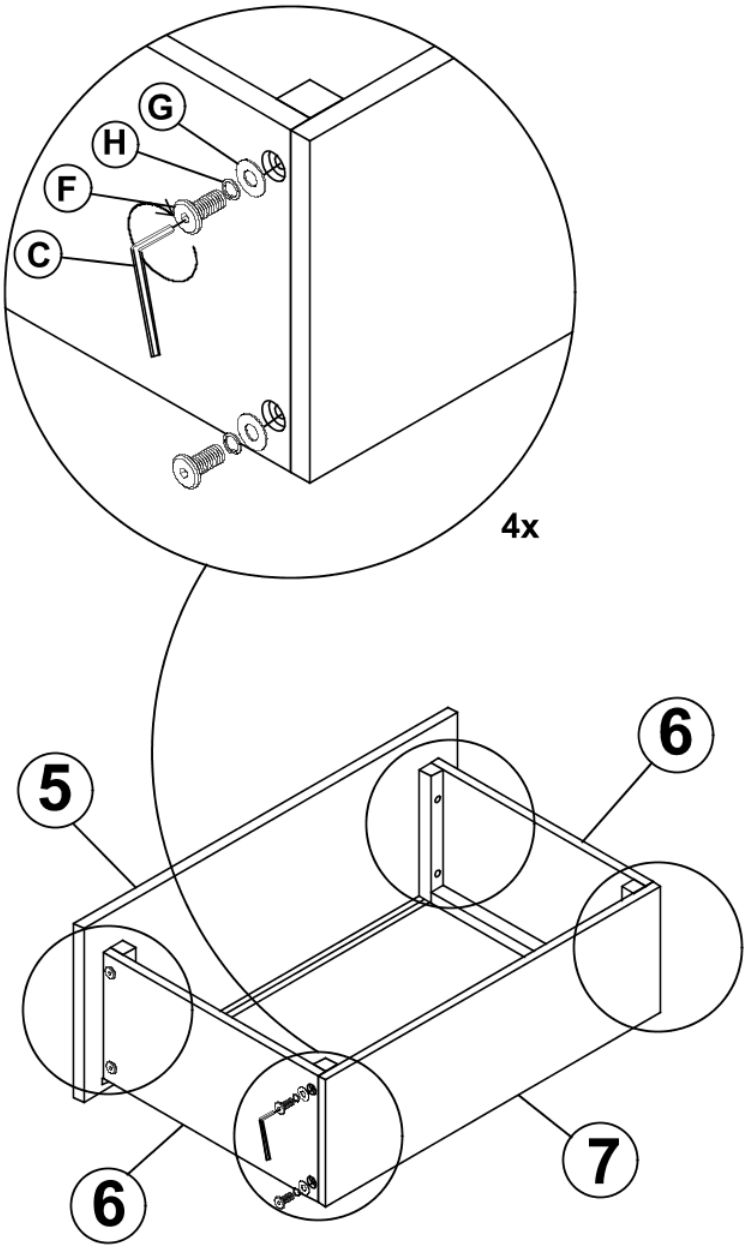

ASSEMBLY

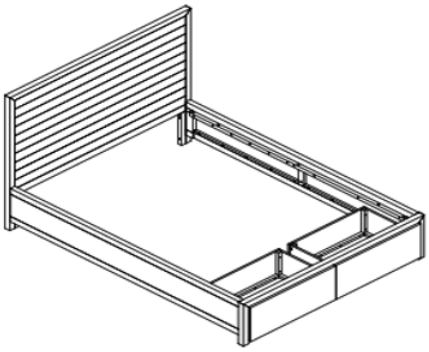

- Assembly the Bottom Drawer (8) to two Side Drawers (6) and Back Drawer (8) with Bolt (F) plus Flat Washer (G) and Lock Washer (H) using Allen Key (C).

STEP 3 - 2X

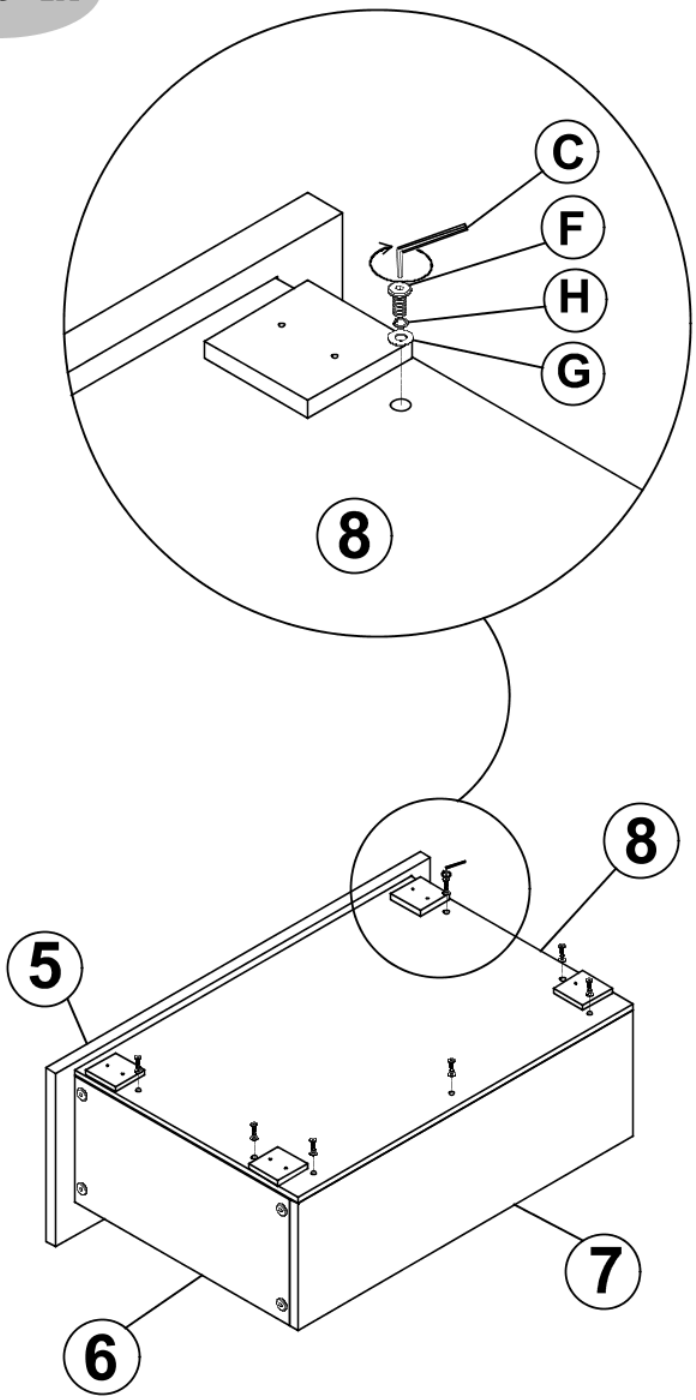

ASSEMBLY

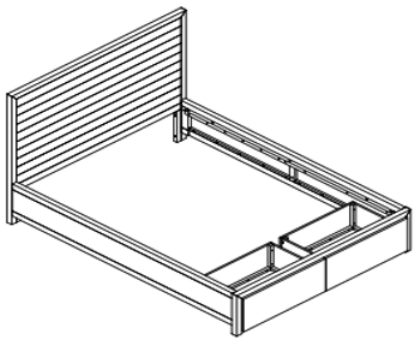

- Assembly the Wheel (K) to Bottom Drawer (8) with Screw (I) using Screwdriver (not included).

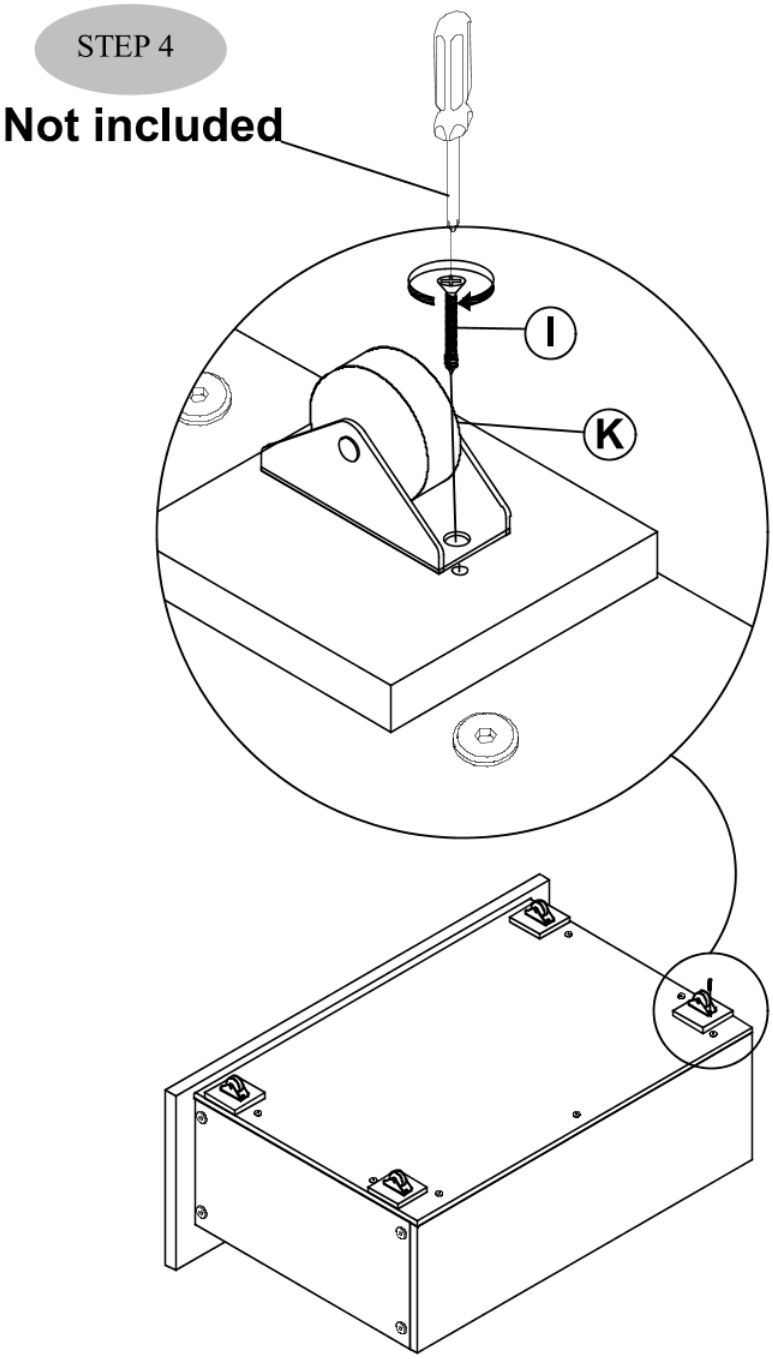

ASSEMBLY

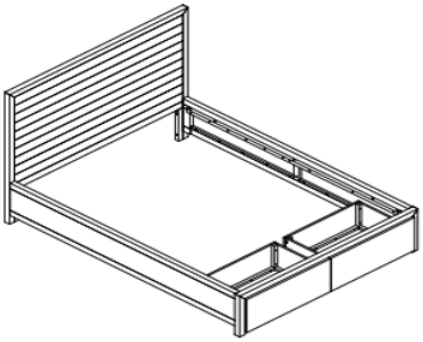

NOTE: You have bought your bed, choosing one of two slat options; either solid or sprung. Although both assembly options are explained here only one will apply to you. Please follow the correct procedure for the slat system which you have chosen.
Both slats on "step 2" and "step 3" can be assembled to the bedstead. You can make a choice between the two slats.

OPTION"A": DREAMS FIXED WOOD SLATS

(1) Carefully locate the slats onto the unit, as step 2:

Use bolt (A), washer (D) and JCN nut (B) to fix the unit using Allen Key (C)

(2) Fit the adjustable Support Leg (4) to the center slat. Secure with screw (E) using screwdriver (not provided).

STEP 4

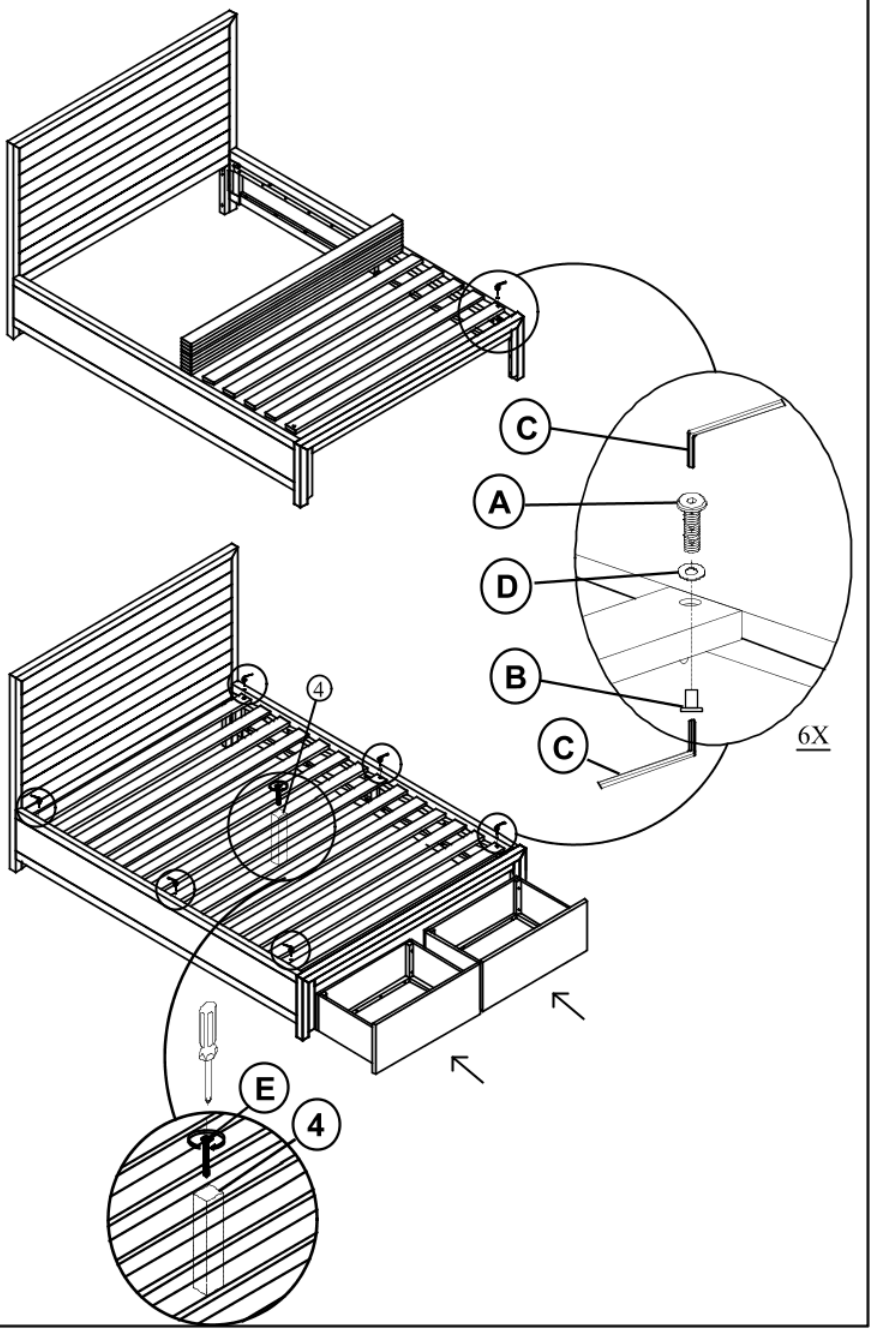

ASSEMBLY

OPTION "B": DREAMS SPRUNG SLATS

(1) Use the bolt to fix support leg onto the slat frame. Please note that these bolts are to be found inside the slat frame box.

(2) Carefully locate the slats onto the unit.

(3) Use bolt (A) and JCN nut (B) to fix the unit using Allen Key (C).

(4) Push the Drawers into the bed after finished assembly the Slats.
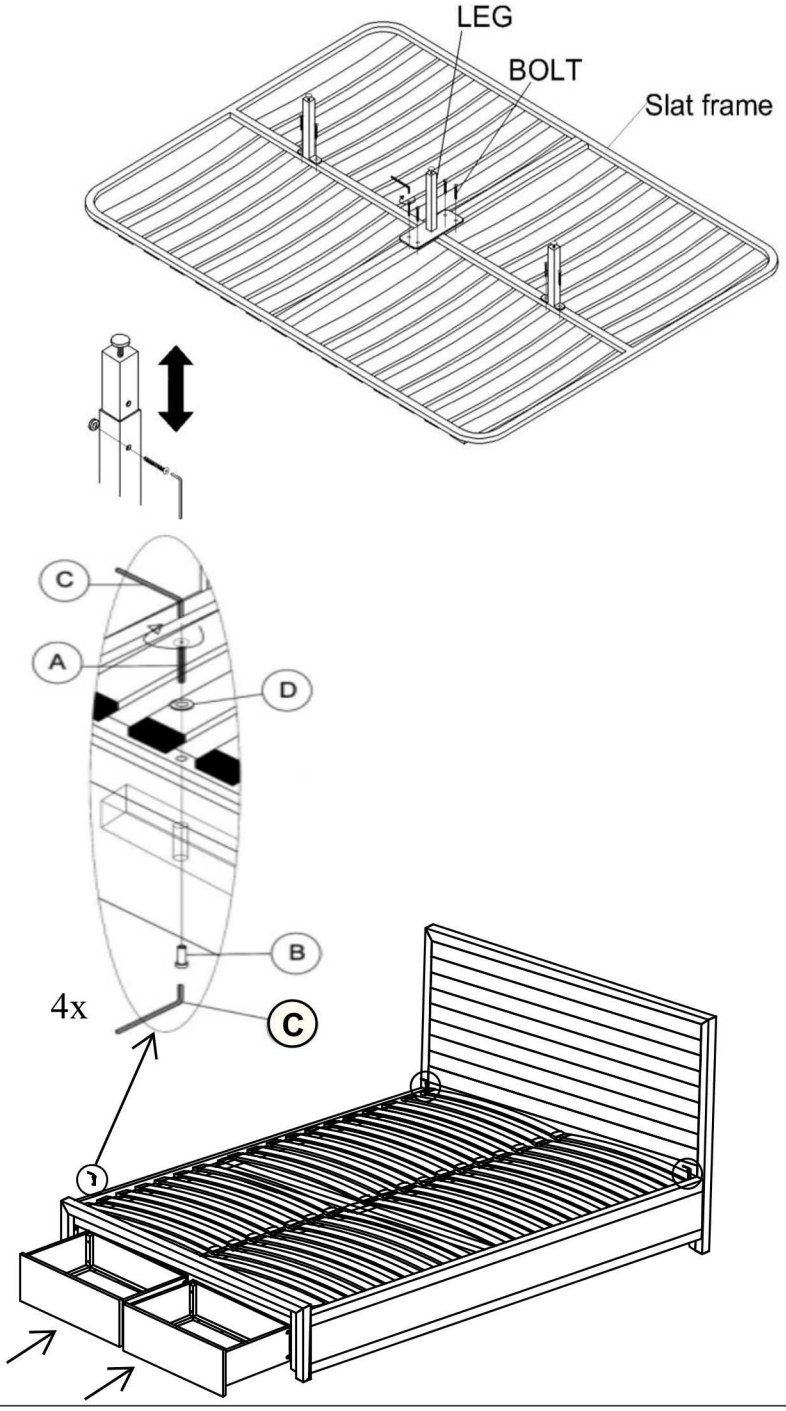
STEP 3